UNIVERSITÄT
HEIDELBERG

Layout and routing on the E-Module

Schaltungstechnik
und Simulation

Christian Kreidl

christian.kreidl@ziti.uni-heidelberg.de

7th International Workshop on DEPFET Detectors

and Applications

Ringberg

08.05 – 11.05.2011

Goals

- test 'all-silicon module' concept
- design as close as possible to final module
  - all module interconnection routed via kapton
  - 2 alu + 1 copper layer
  - flipchip with solderbumps
  - mechanical: thinning, half module gueing, end flange mounting
  - but no active DEPFETs → test structures in `active area`
- end-of-stave
  - 4 DCD + 4 DHP
  - footprint for wide kapton cable (supported by screw)
  - routing of high current supplies of DCD and DHP
- balcony
  - 6 Switchers
  - 3 segmented gate voltages
  - decoupling on balcony

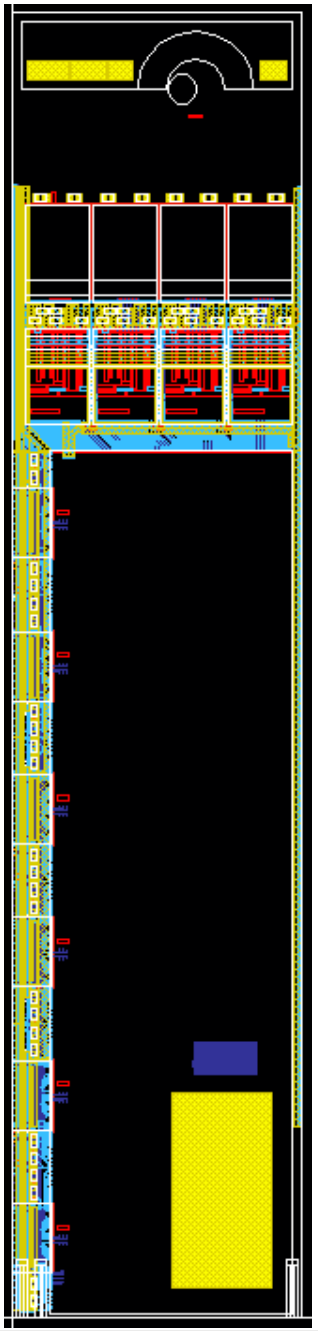

Decoupling

- decoupling capacitors
  - 2 caps per segmented gate-on voltage
  - 6 caps for gate-off voltage
  - 3 caps per clear voltage
  - 3 caps per digital voltage (VDD, VDDJTAG)
  - 0201 size: 0.6mm x 0.3mm x 0.33mm (LxWxH)
  - 10nF @10V
  - 330pF @25V

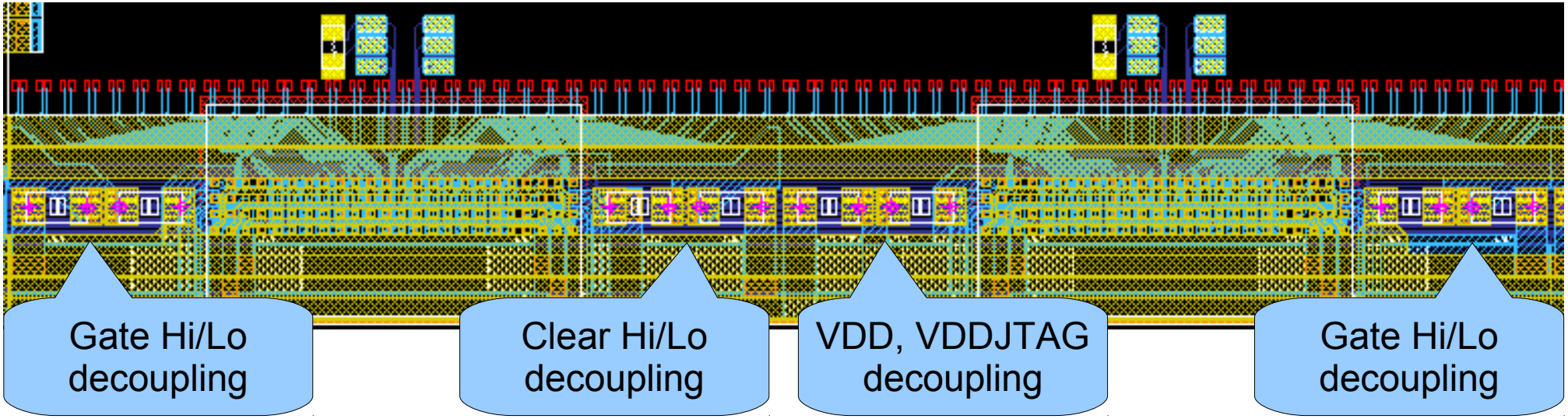

Switcher

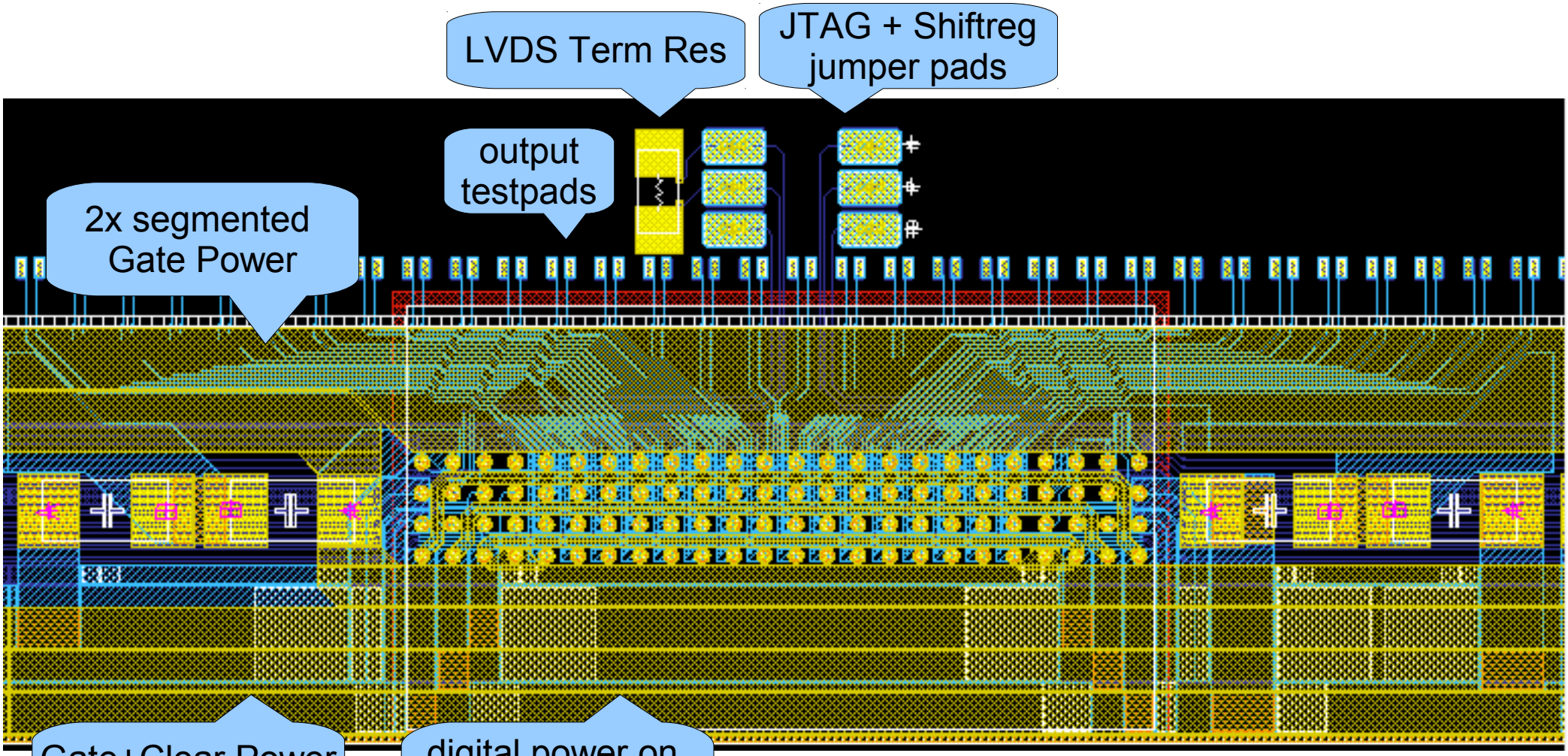
LVDS Term Res
JTAG + Shiftreg jumper pads
output testpads
2x segmented Gate Power
Gate+Clear Power on copper layer
digital power on alu layer; 2 layer where possible

Routing to Kapton

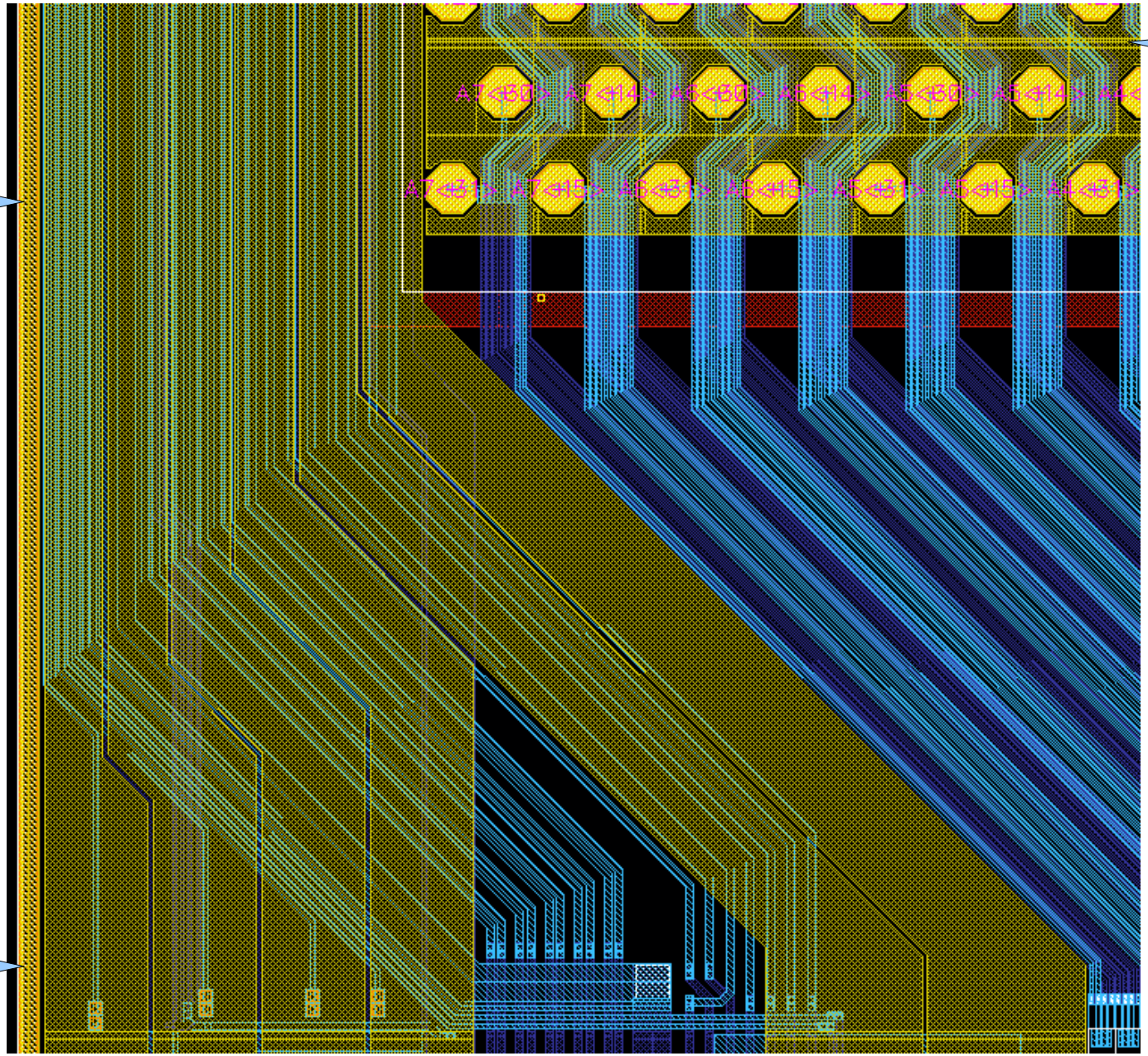

DCD

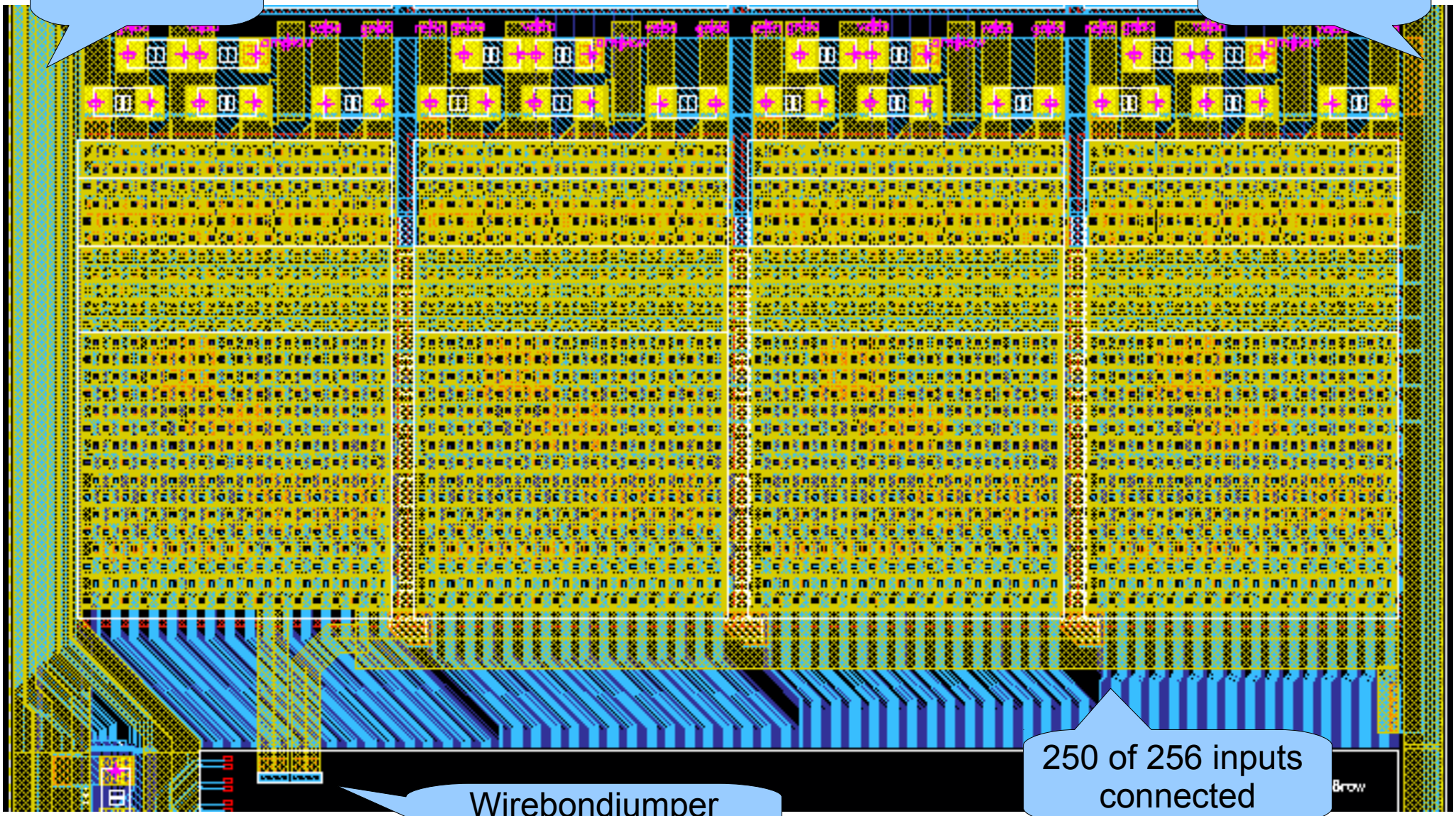
Switcher connections
Matrix connections
250 of 256 inputs connected
Wirebondjumper to connect ground nets

DCD Power + Decoupling

5 decoupling caps 0201

power pads with main rails (170µm)

5 additional rails connected vertically to main rails (~350µm)

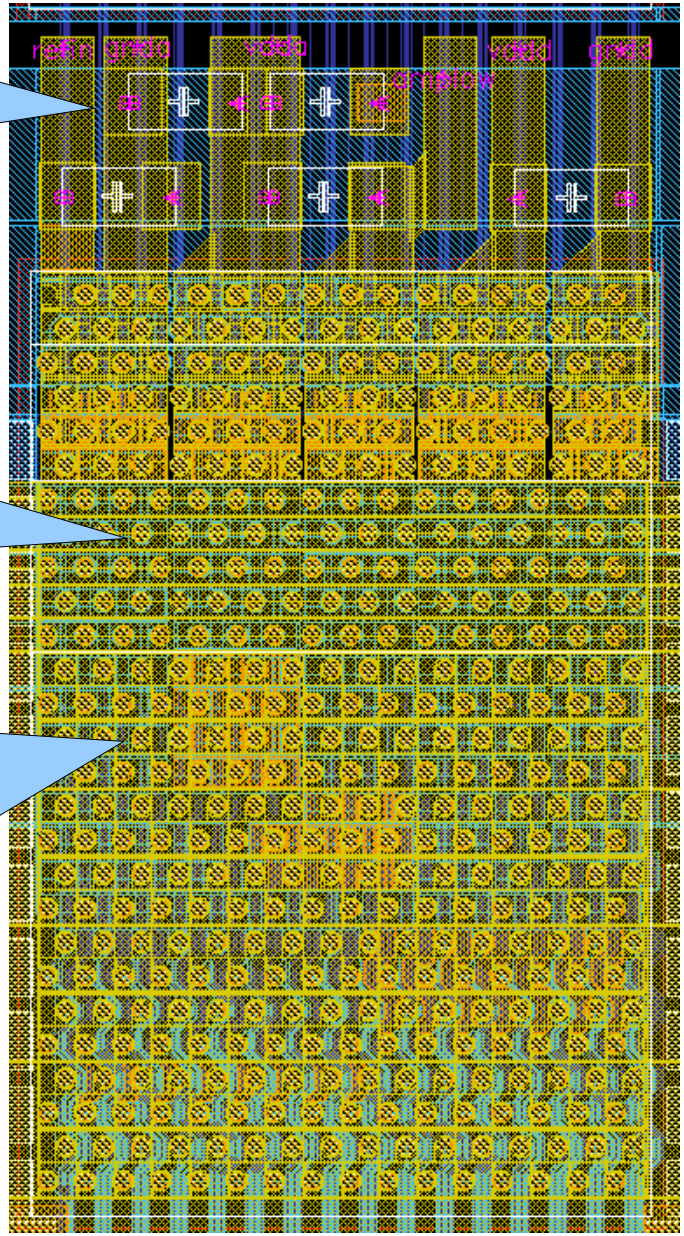

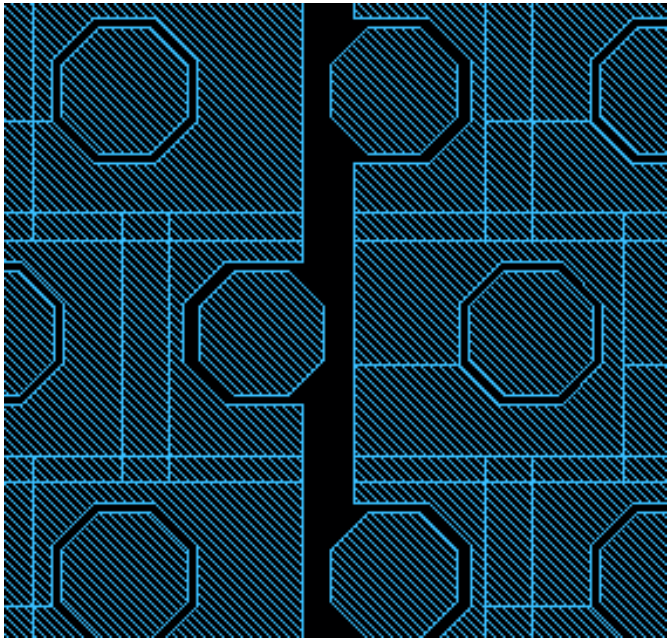

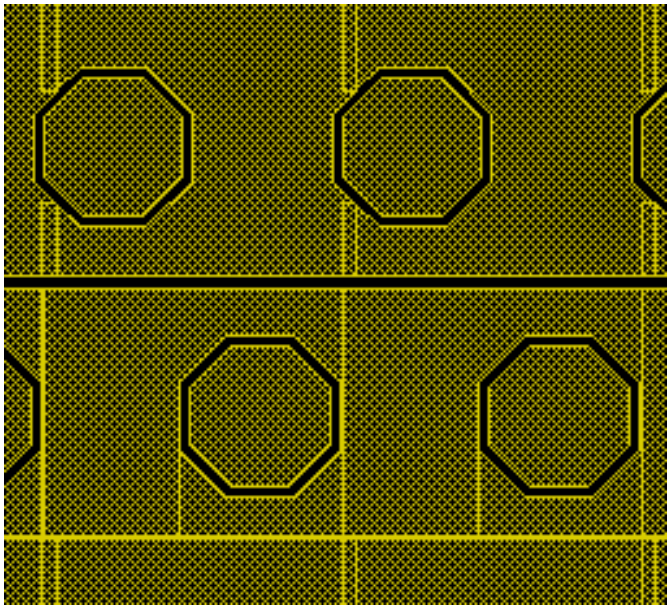

DHP

- DHP todo
  - dummy footprint used to check space on module
  - DHP 0.2 footprint got finished last week

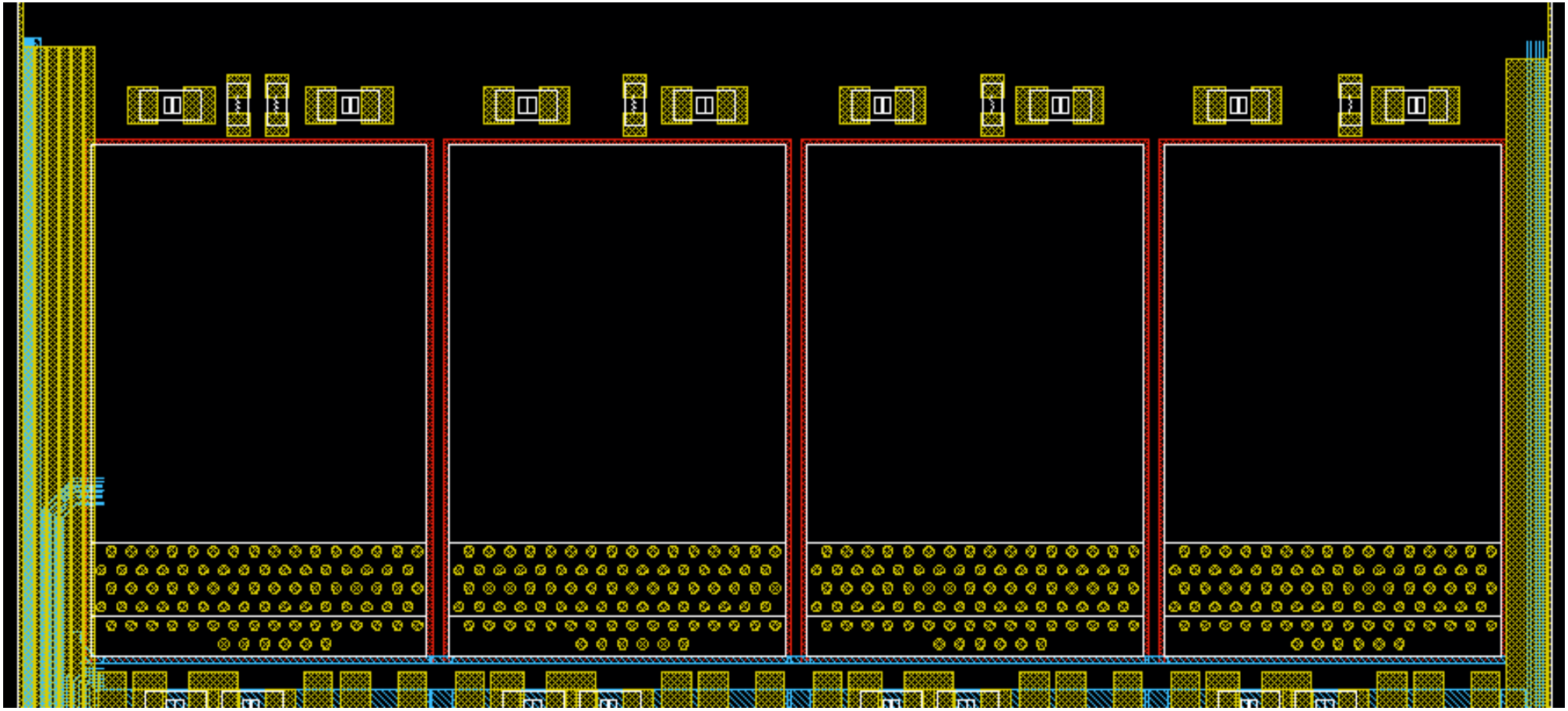

Active Area Region

- add bondpads for piggyback mounting of small matrix
  - route matrix supplies via kapton
- add load capacitors to switcher outputs
- connect DCD inputs to long lines to simulate load and crosstalk
- wirebond-/probe-pads for test current injection

Bondpads for piggyback matrix

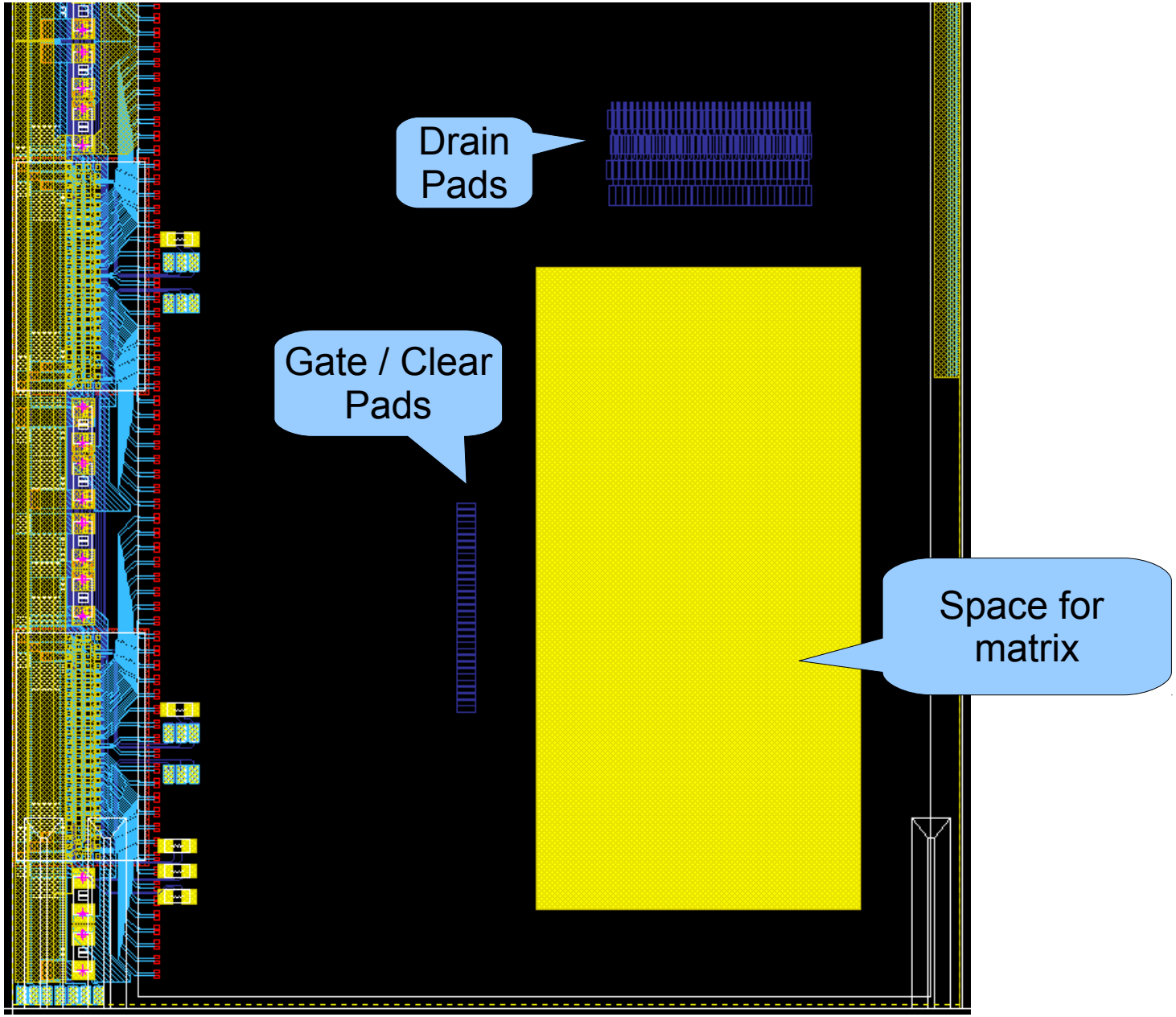

Landing Pads for Kapton

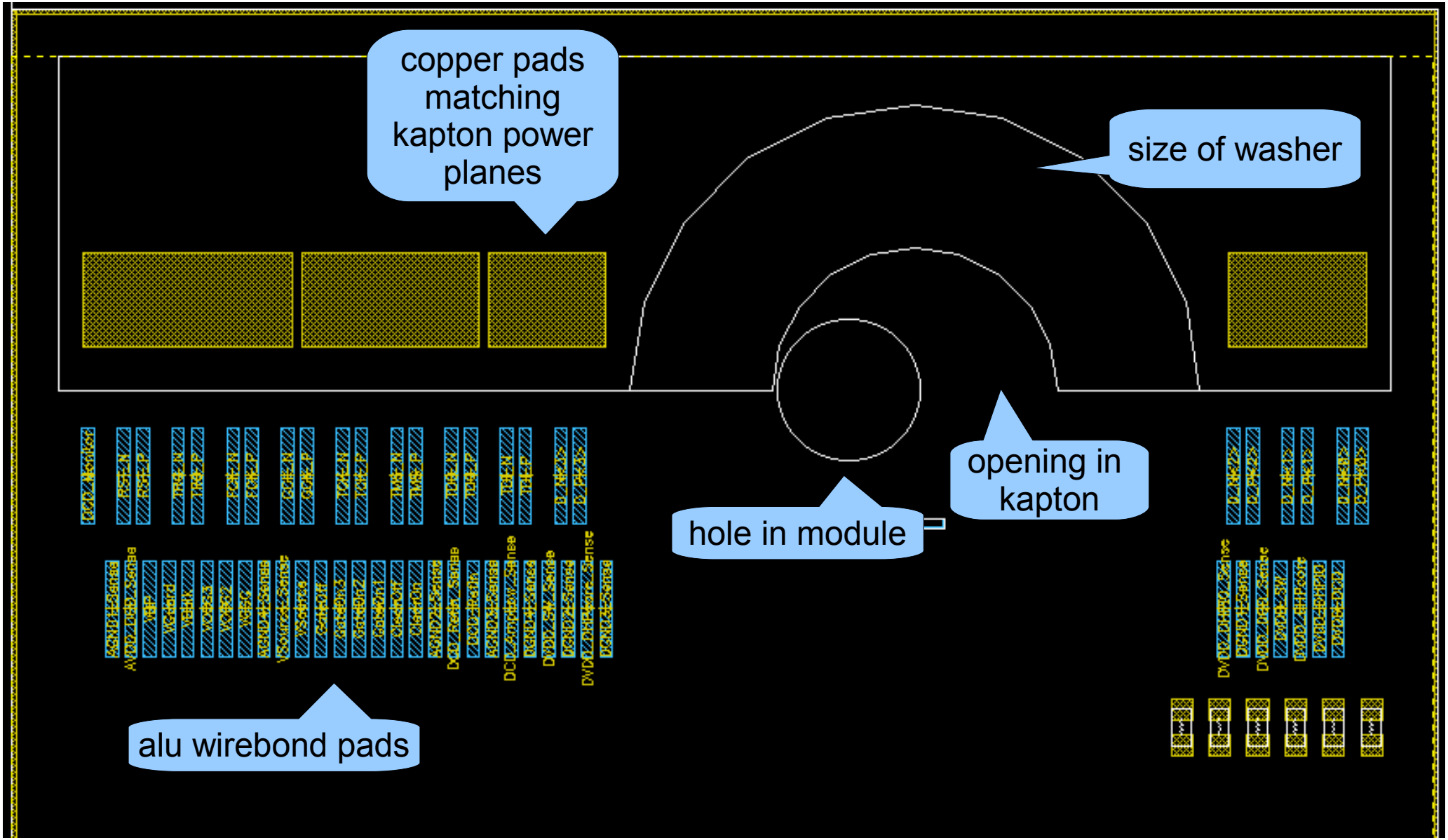

Summary

- Switcher balcony layout done
  - segmented gate-on voltages
  - capacitors
  - DRC clean
- DCD power routing done
  - additional horizontal power lines to lower voltage drop across chips
  - vertical connection to the main power line and to the decoupling
  - drain connection done
- ToDo
  - DHP connections
  - DHP + DCD power routing
  - connecting everything to the kapton
  - active area test structures
  - DRC + LVS checks (rules files available)

Thank you!