Testbeam setup in basf2

Tadeáš Bílka, Peter Kvasnička, Peter Kodyš, Jozef Kovaľ
Institute of Particle and Nuclear Physics,
Charles University, Prague

DEPFET meeting 2011, Ringberg,
8 - 11 May 2011

CU Prague

Overview

- Why analyze testbeam data in basf2?
- Current status
- Some results
- Plans
- Conclusions

CU Prague

Why analyze testbeam data in basf2?

- **Testbeam analysis is a simple test case.**
  - **Verification and cross-checking tool**
    - Testbeam data are easily simulated and analyzed with independent tools, which makes them a useful tool for verification of simulation and reconstruction steps.
    - For adjusting simulation/processing steps, it is a great advantage to process testbeam data in the same environment and using the same tools as in real Belle II simulation and analysis.
    - It is a good test of implementation of basf2 processing – any hard-wired dependencies on Belle II geometry easily show up.
  - **Entry point to basf2.**
    - Being a simple test case, it is a good starting point for familiarization with basf2. For example, it is a good exercise to create a testbeam geometry from scratch.

- **Basf2 is a good environment for testbeam analysis**
  - Python steering, availability of geometry, ROOT output data, and framework support provide a comfortable environment for testbeam simulation and analysis.

CU Prague

Current status

- **Geometry of the 2009 DEPFET testbeam implemented .** Geometry data (xml) and geometry creator allow to create geometry in basf2, without any modifications to the framework.
- **The data and code are available,** and we will submit them to basf2 svn.
- **Demo results.** We show some preliminary results to show that the implementation is working.

CU Prague

Results: Testbeam geometry

– **Testbeam geometry is in place.**

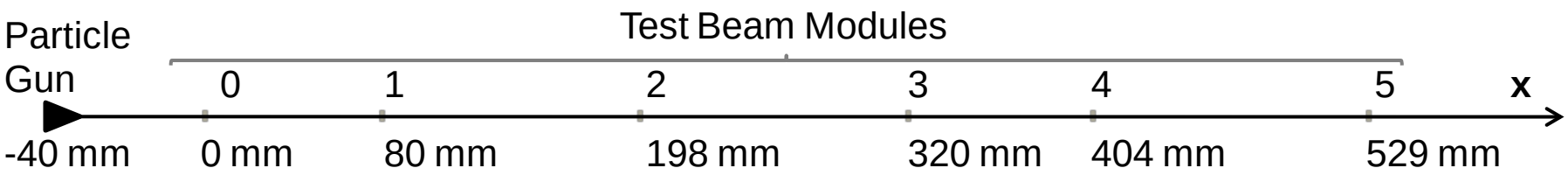

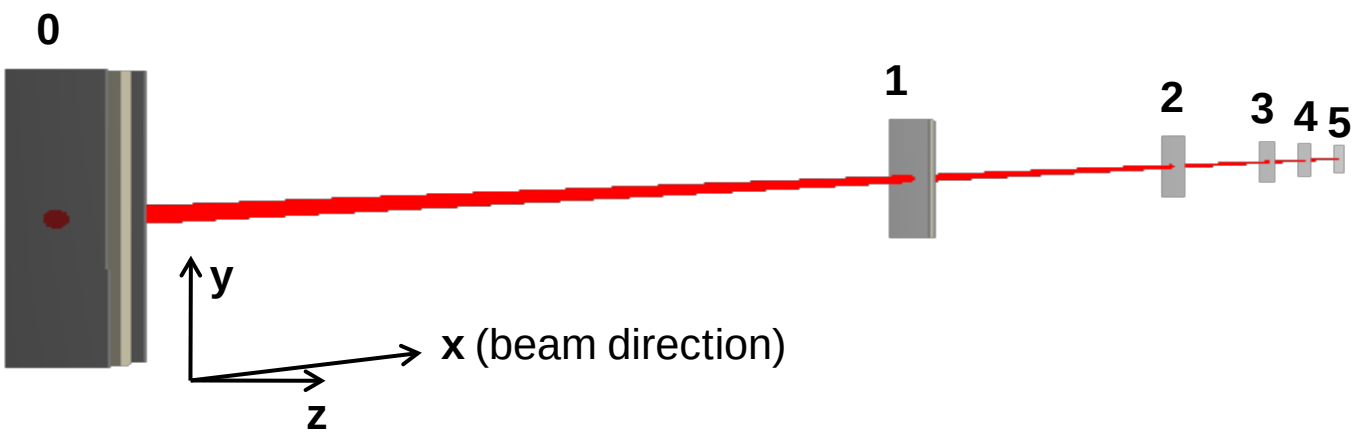

CU Prague

Results: Testbeam geometry

– **Testbeam geometry is in place.**

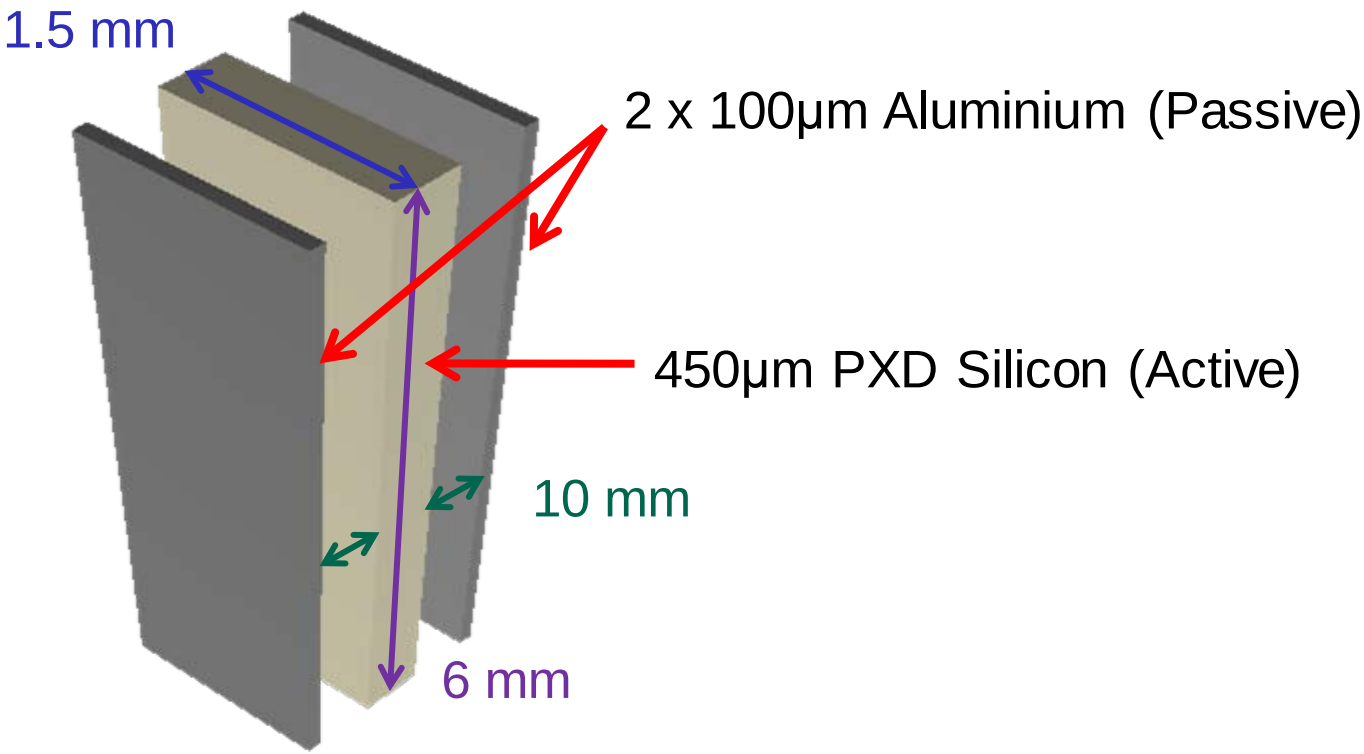

CU Prague

Results: Tracking

- **Simulattion of 20 000 120 GeV pions, Gaussian-smear digitizer, pre-set resolutions δu = 1.2 μm, δv = 1.0 μm, line fit.**

Sensor	σ_u [μm]	$\Delta\sigma_u$ [μm]	σ_v [μm]	$\Delta\sigma_v$ [μm]
0	2,145	0,012	1,914	0,010
1	1,495	0,008	1,280	0,007
2	1,560	0,008	1,368	0,007
3	1,565	0,008	1,392	0,007
4	1,509	0,008	1,307	0,007
5	2,472	0,013	2,264	0,012

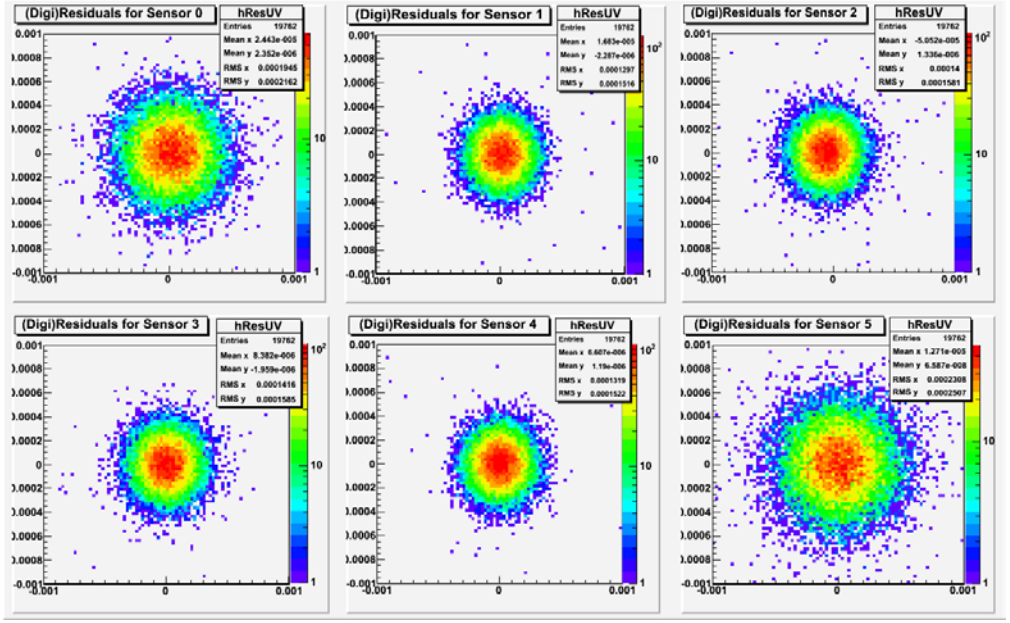

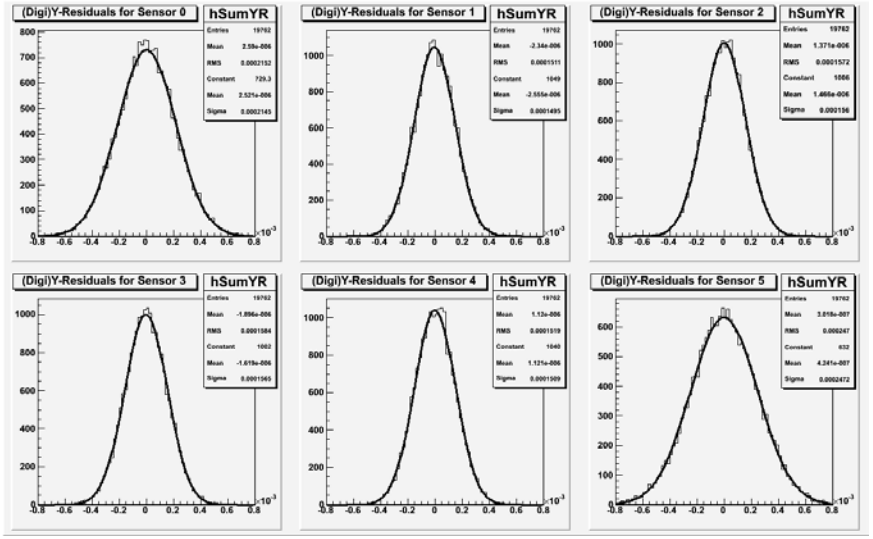

CU Prague

Results: Energy scan

- **Pions with energies from 20 to 80 GeV, line fits, u coordinate (pre-set resolution 1.2 µm)**

E [GeV]	1/E (GeV^{-1})	σ[µm]					
		Det. 0	Det. 1	Det. 2	Det. 3	Det. 4	Det. 5
20	0,050	7,4	2,77	4,47	4,73	3,35	8,72
30	0,033	5,18	2,2	3,25	3,33	2,48	6,43
40	0,025	4,16	1,92	2,66	2,73	2,15	5,16
60	0,017	3,05	1,66	2,05	2,09	1,74	3,69
80	0,013	2,57	1,58	1,79	1,84	1,62	3,11

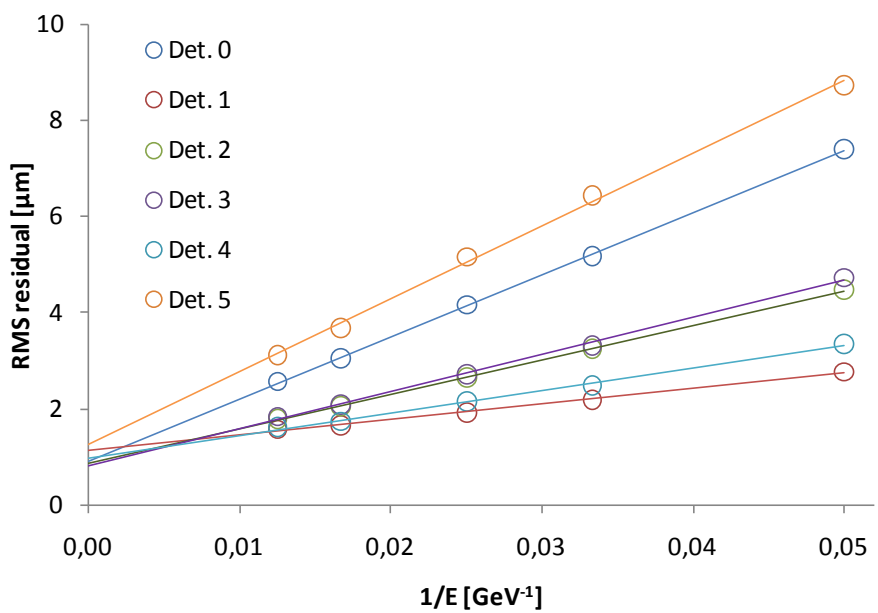

CU Prague

Plans

- **Try to use pattern reco and genfit.**
- **Simulate with full digitizer.**
- **Compare with existing 2009 analyses.**
- **Prepare for future testbeams.**
  - Specific testbeam modules:
    - data readers,
    - calculation of pixel gains,
    - position bias,
    - ? alignment
    - resolutions.

CU Prague

Conclusions

- The 2009 DEPFET testbeam geometry was implemented in basf2
- Its basic functionality was tested.
- We want the code to become official part of basf2 distribution.
- We go on to test the full digitizer, basf2 pattern reco / tracking and to develop specific testbeam modules.

Thanks for your attention!