Status of the Remote Vacuum Connection System

carsten.niebuhr@desy.de

Basic Principle

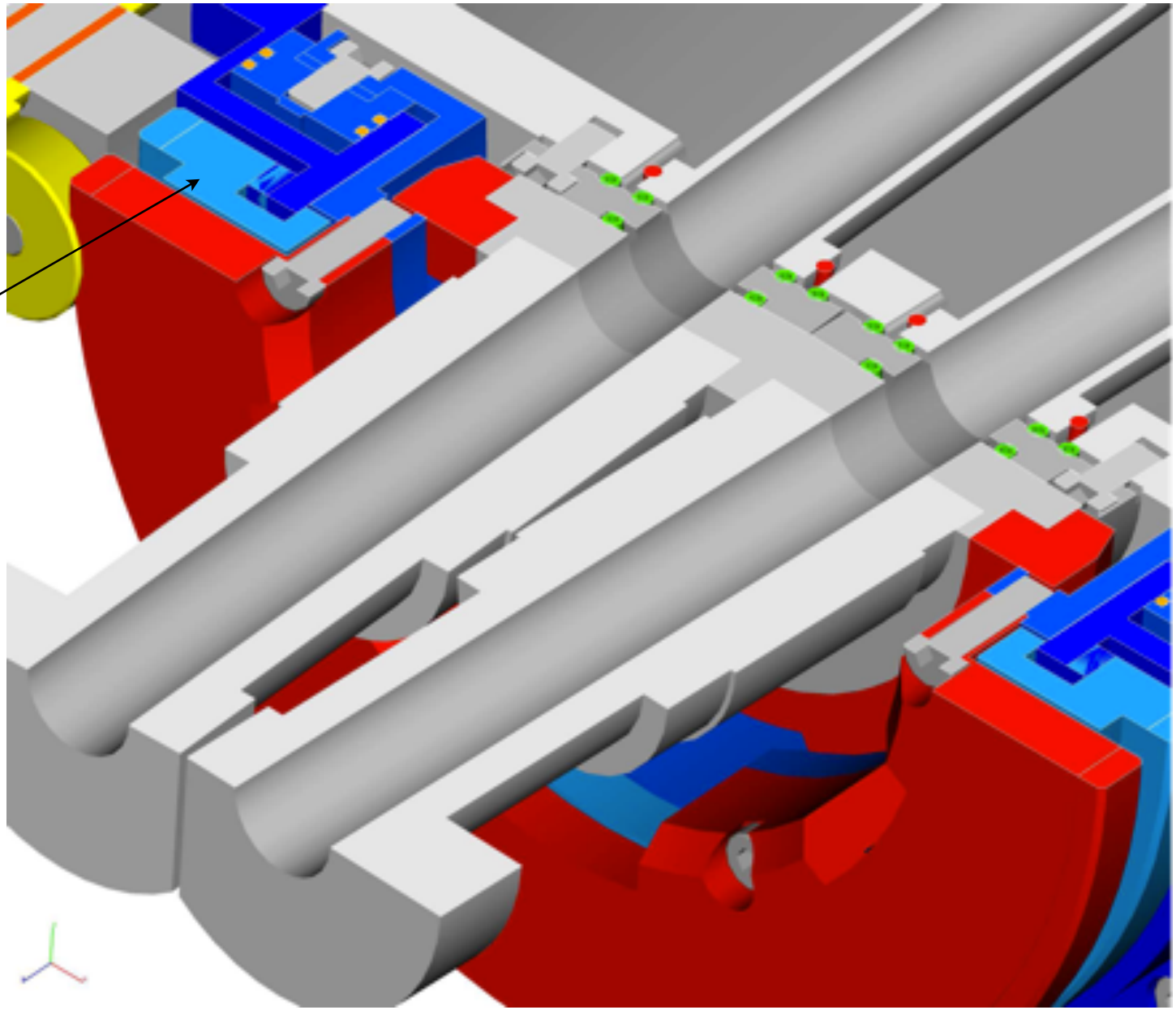

Basic Principle

Engaging locking mechanism

Lock nut

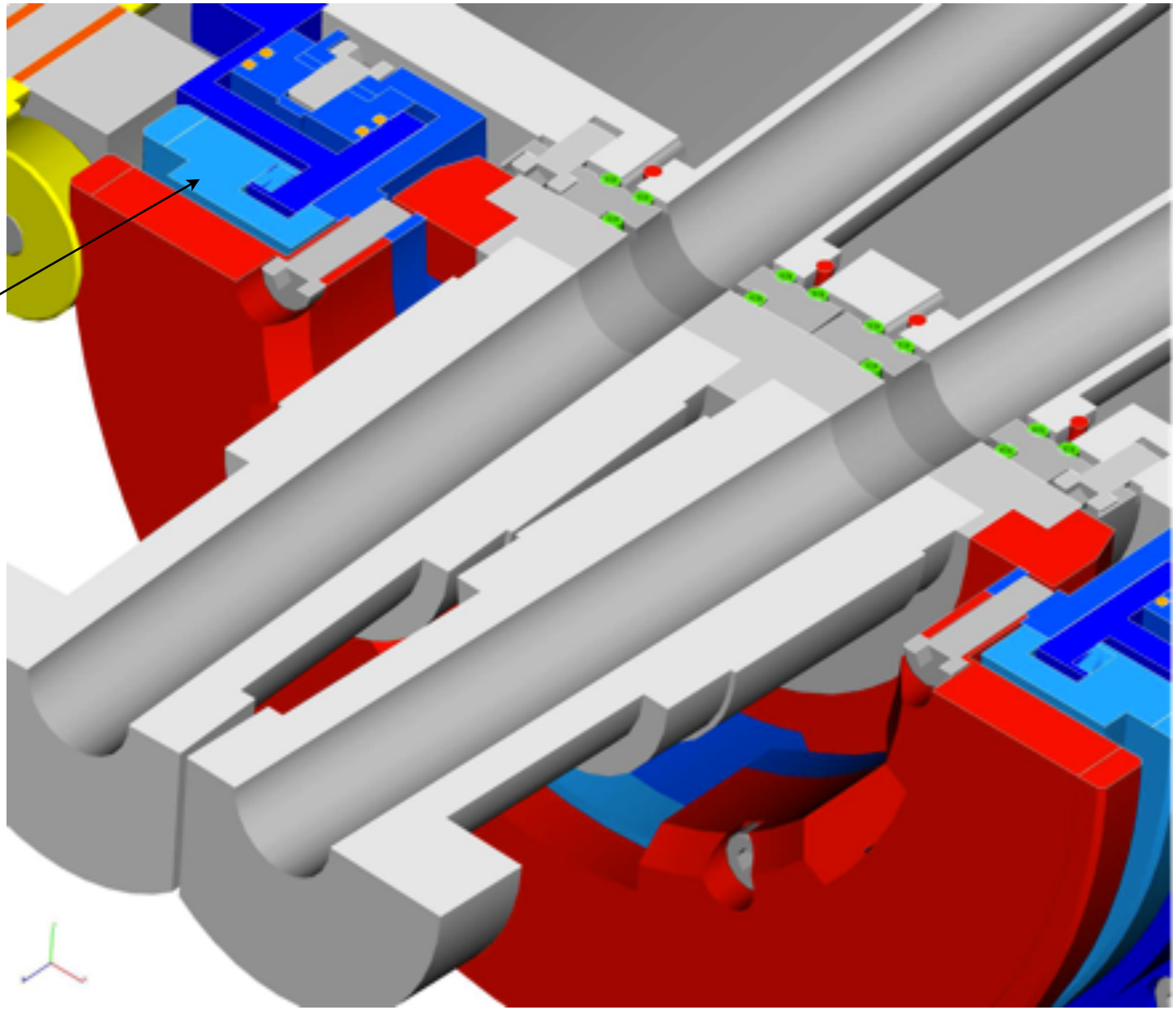

Status at Wetzlar Meeting

- Mechanical issues
  - new cylinder housing with threaded Swagelock connectors
    - avoid deformation and reduce slack
    - too high friction between rubber seal and cylinder housing
  - increase rigidity of operating head by adding counter bearing
  - avoid blockade of lock-nut under large hydraulic pressure

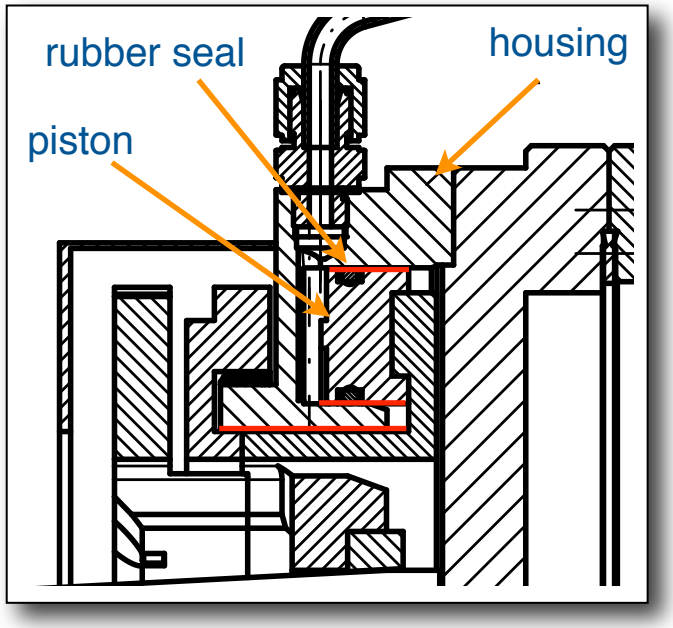

- Vacuum properties
  - leak tightness of Helicoflex vacuum seals at QCS flange demonstrated

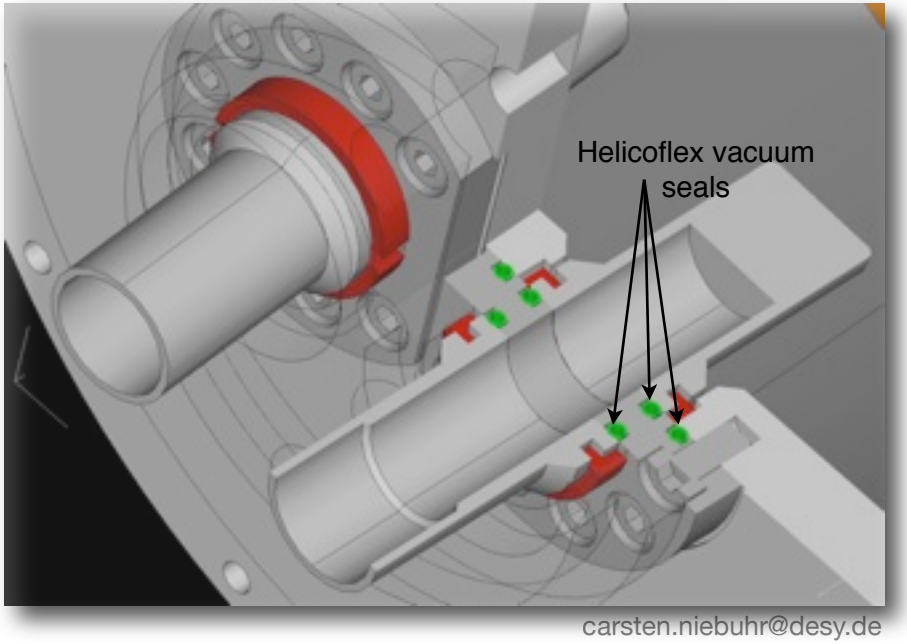

Status at Wetzlar Meeting

- Mechanical issues
  - new cylinder housing with threaded Swagelock connectors
    - avoid deformation and reduce slack
    - too high friction between rubber seal and cylinder housing
  - increase rigidity of operating head by adding counter bearing
  - avoid blockade of lock-nut under large hydraulic pressure

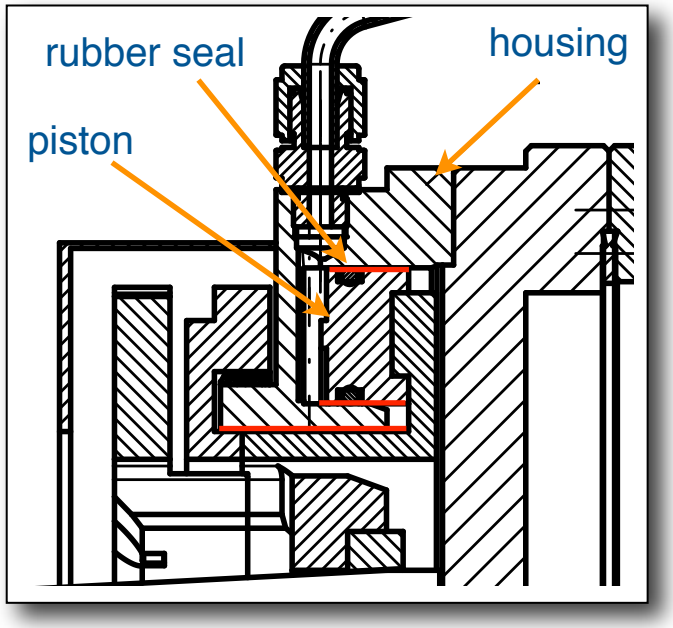

- Vacuum properties
  - leak tightness of Helicoflex vacuum seals at QCS flange demonstrated

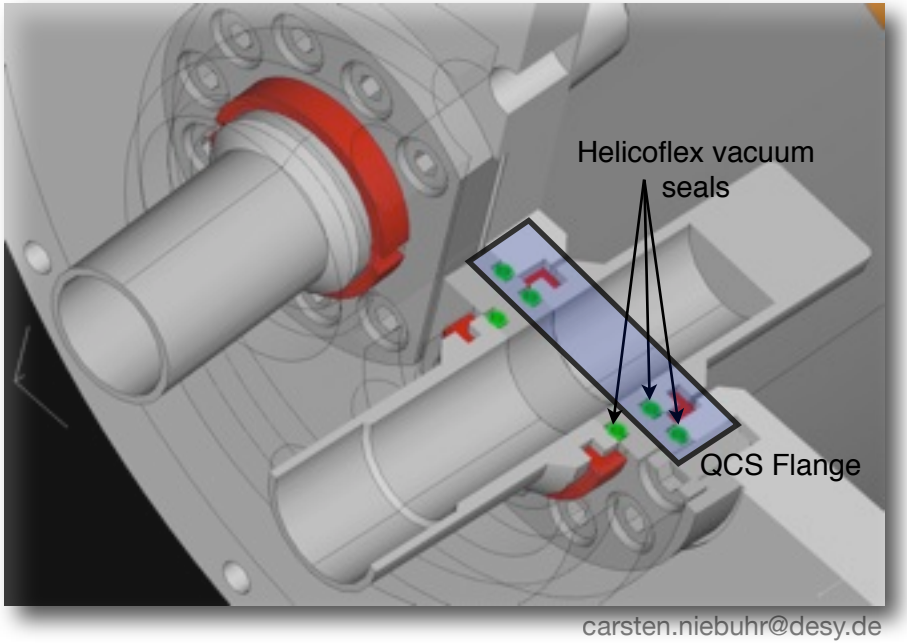

Status at Wetzlar Meeting

- Mechanical issues
  - new cylinder housing with threaded Swagelock connectors
    - avoid deformation and reduce slack
    - too high friction between rubber seal and cylinder housing
  - increase rigidity of operating head by adding counter bearing
  - avoid blockade of lock-nut under large hydraulic pressure

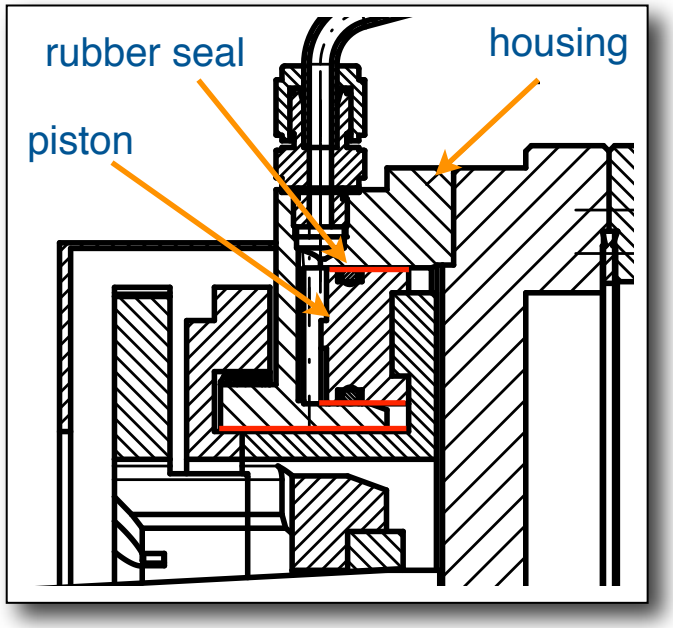

- Vacuum properties
  - leak tightness of Helicoflex vacuum seals at QCS flange demonstrated

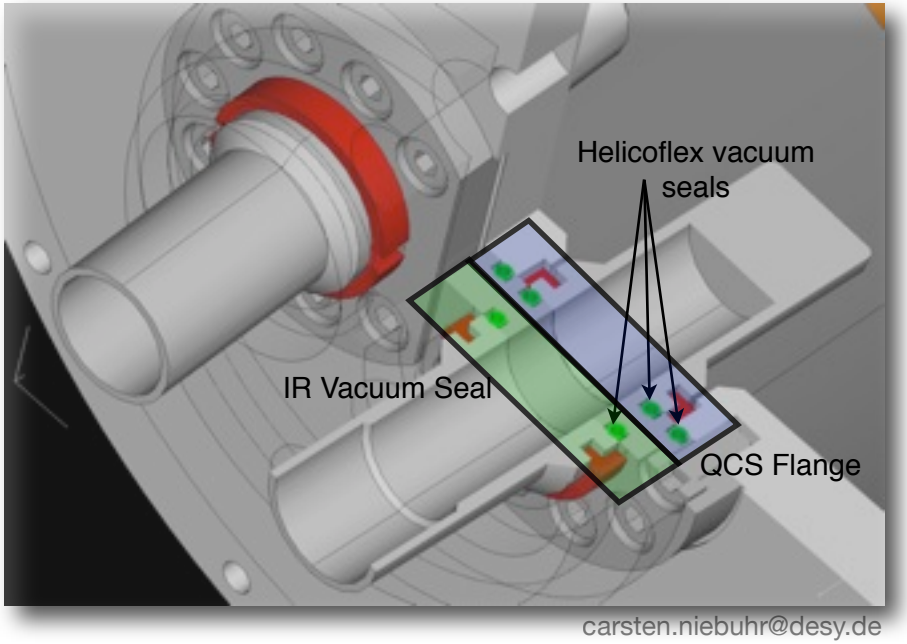

Comments from BPAC Reviews

- Recommendation October focussed BPAC review
  - The idea of remote vacuum hookup looks quite intriguing and we feel it should be pursued by building a prototype. .... The system needs to be extremely reliable and operate in an absolute fail-safe mode. We recommend extensive testing of the mock-up not only to demonstrate the vacuum tightness but also demonstrate the reproducibility and robustness of the proposed solution. In parallel, the original solution must be further studied till the final choice be made.

- Recommendations March BPAC
  - At the fall focused review a new remote vacuum connection of the vertex detector to the QCS was presented which requires very high mechanical precision of all components. The committee would like to reiterate our suggestion to explore alternative solutions and extensive testing of a mock-up, not only to demonstrate the vacuum tightness but also to demonstrate the reproducibility and robustness of the proposed solution.

Modified Bayonet Structure

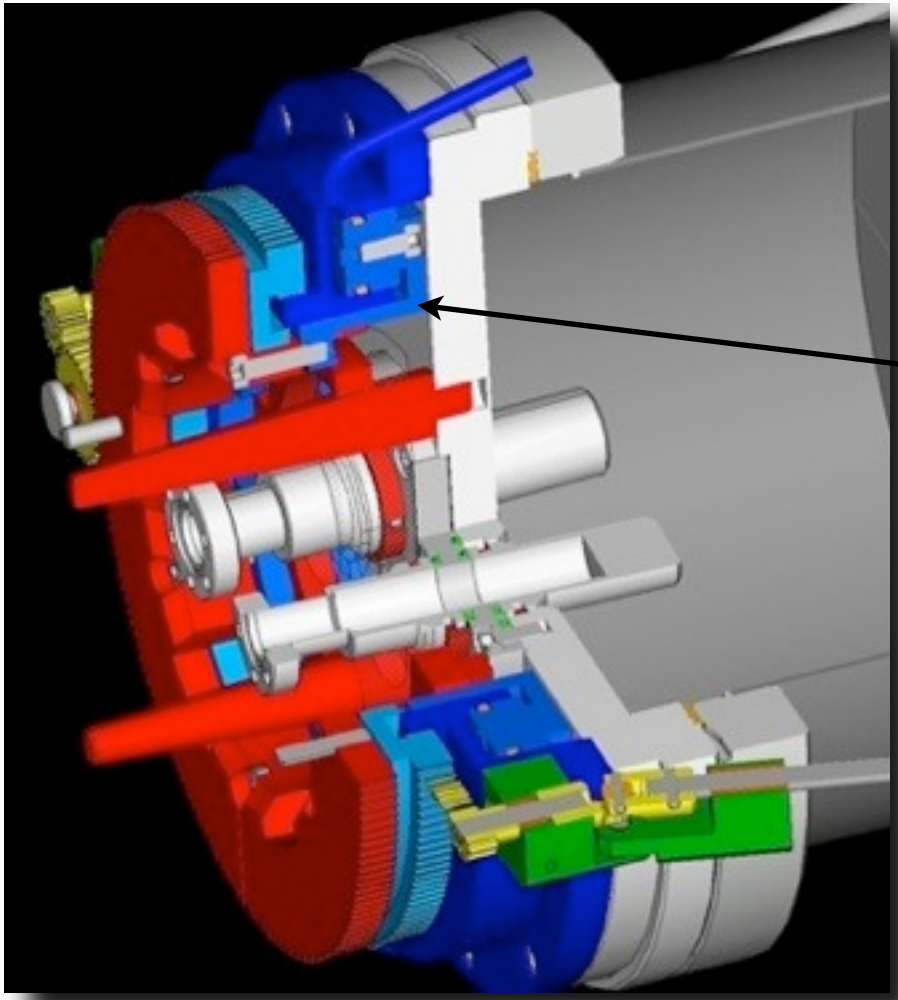

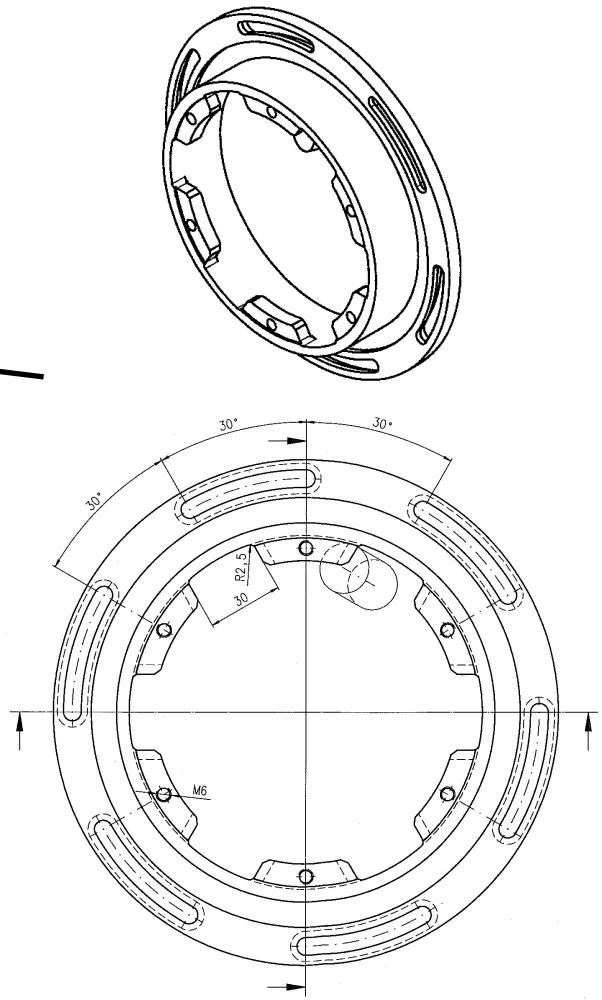

- Modification allows independent rotation of bayonet part and piston
  - no friction between rubber seal and cylinder housing

Mechanical Reproducibility

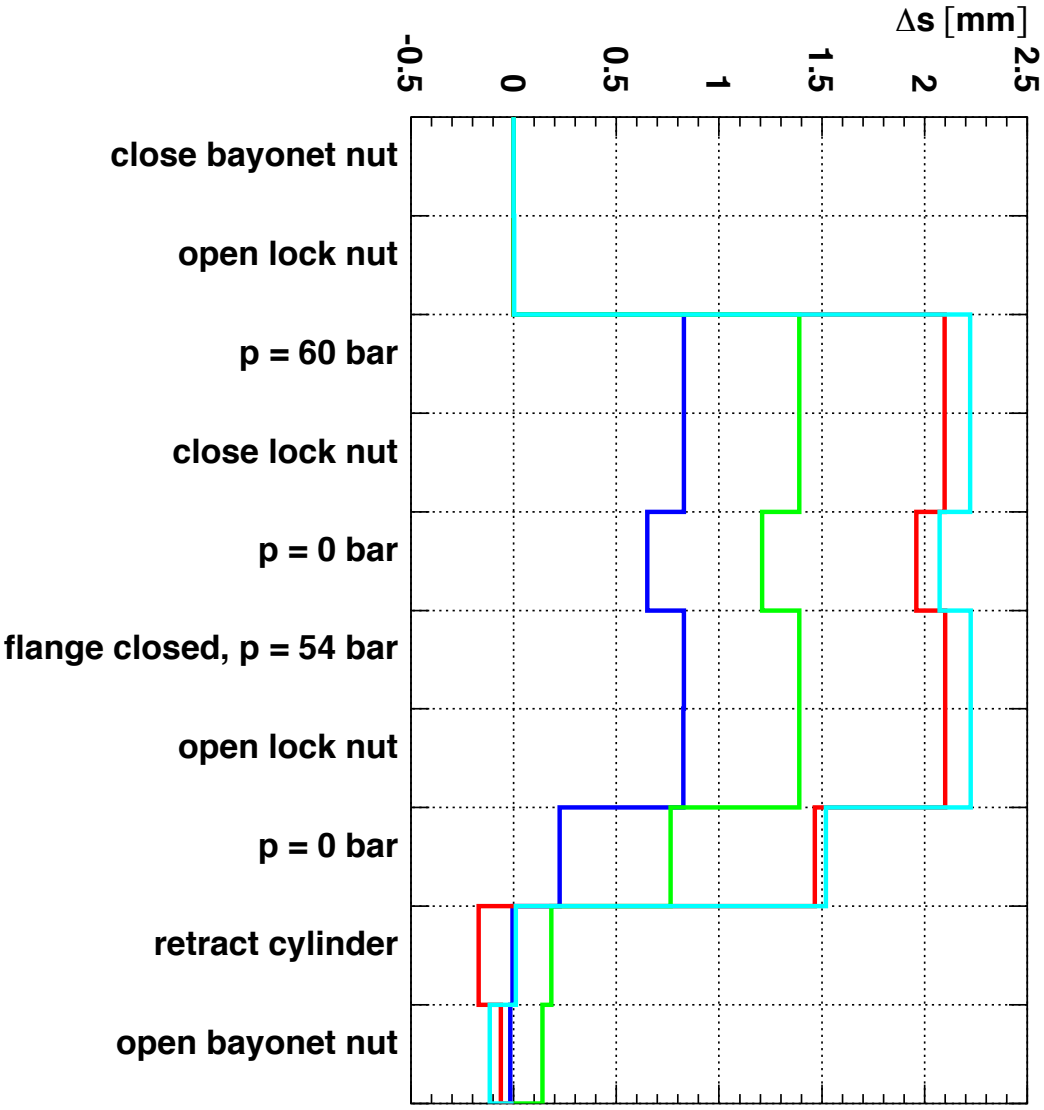

Position Encoder

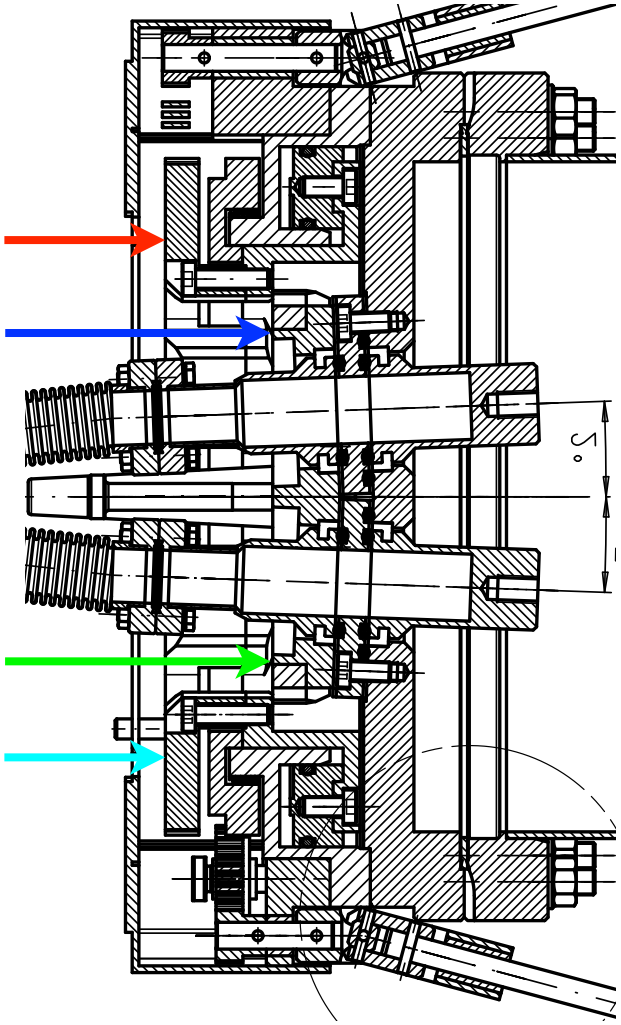

Mechanical Reproducibility

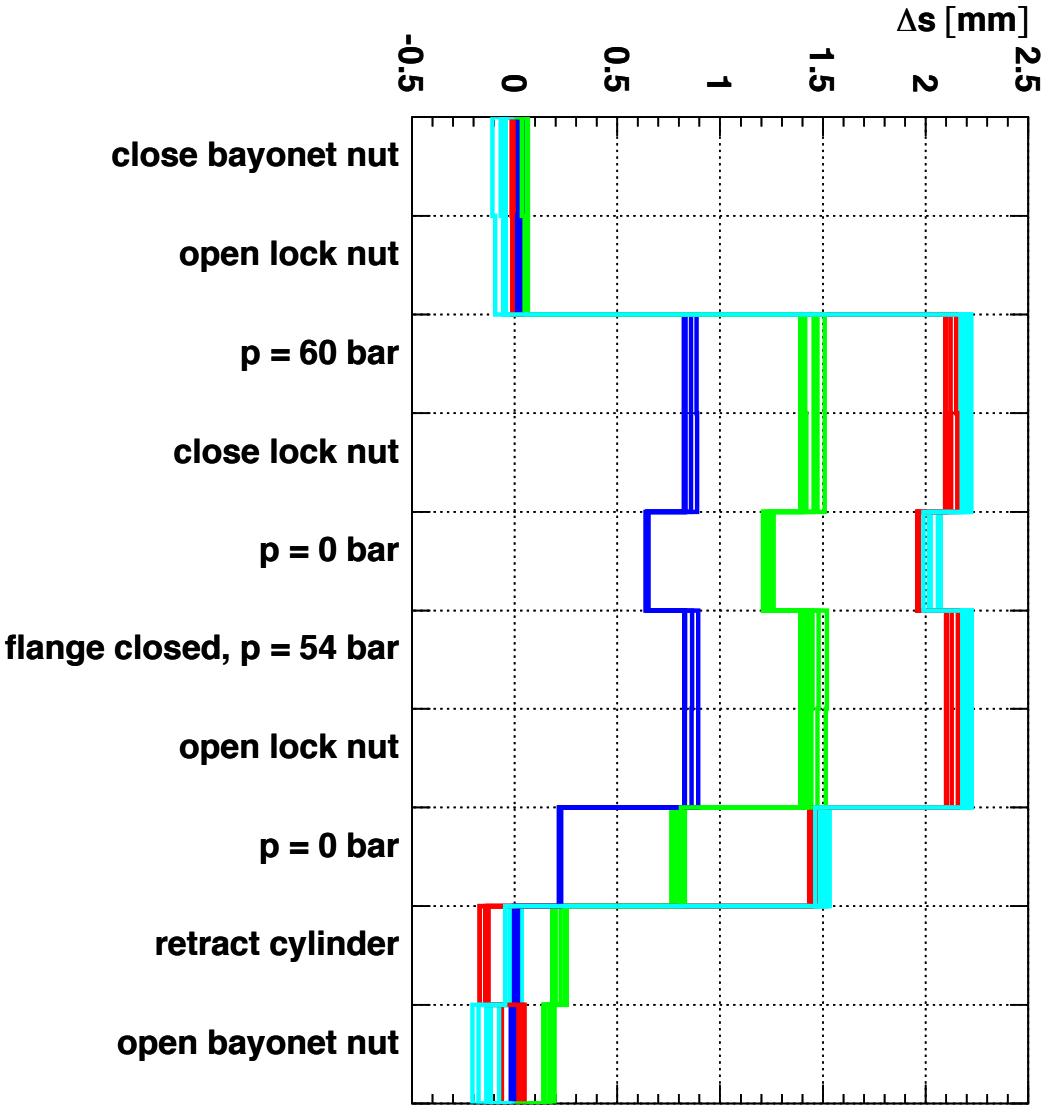

Position Encoder

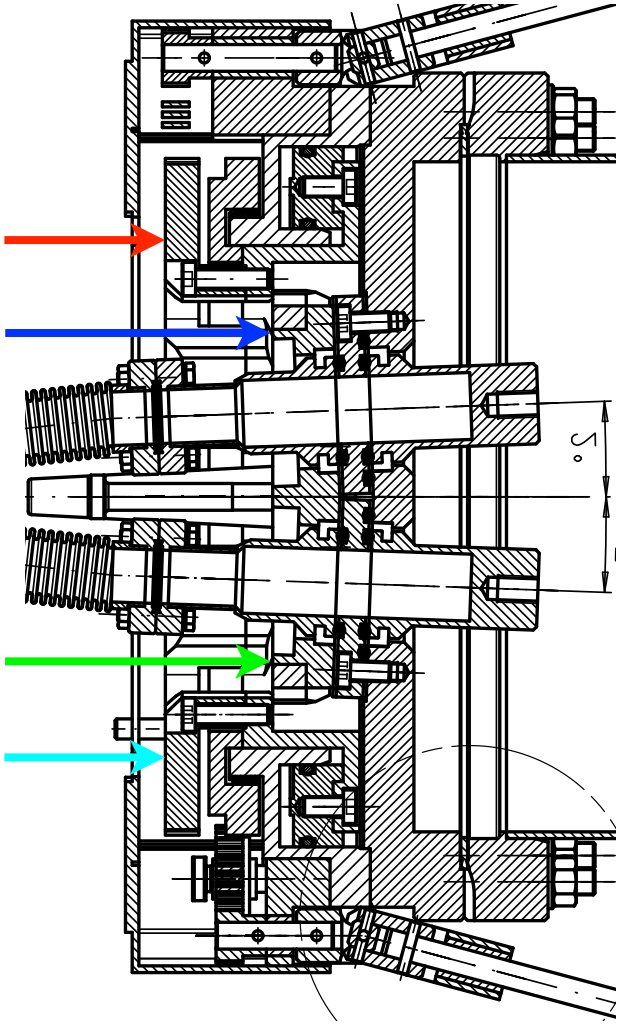

Opening and closing repeated 10 times

Integral Leak Test of IR Vacuum Seal

- Test complicated due to uneven outer envelope of test volume
  1. plastic bag and sticky tape
  2. build plexiglass box around set-up

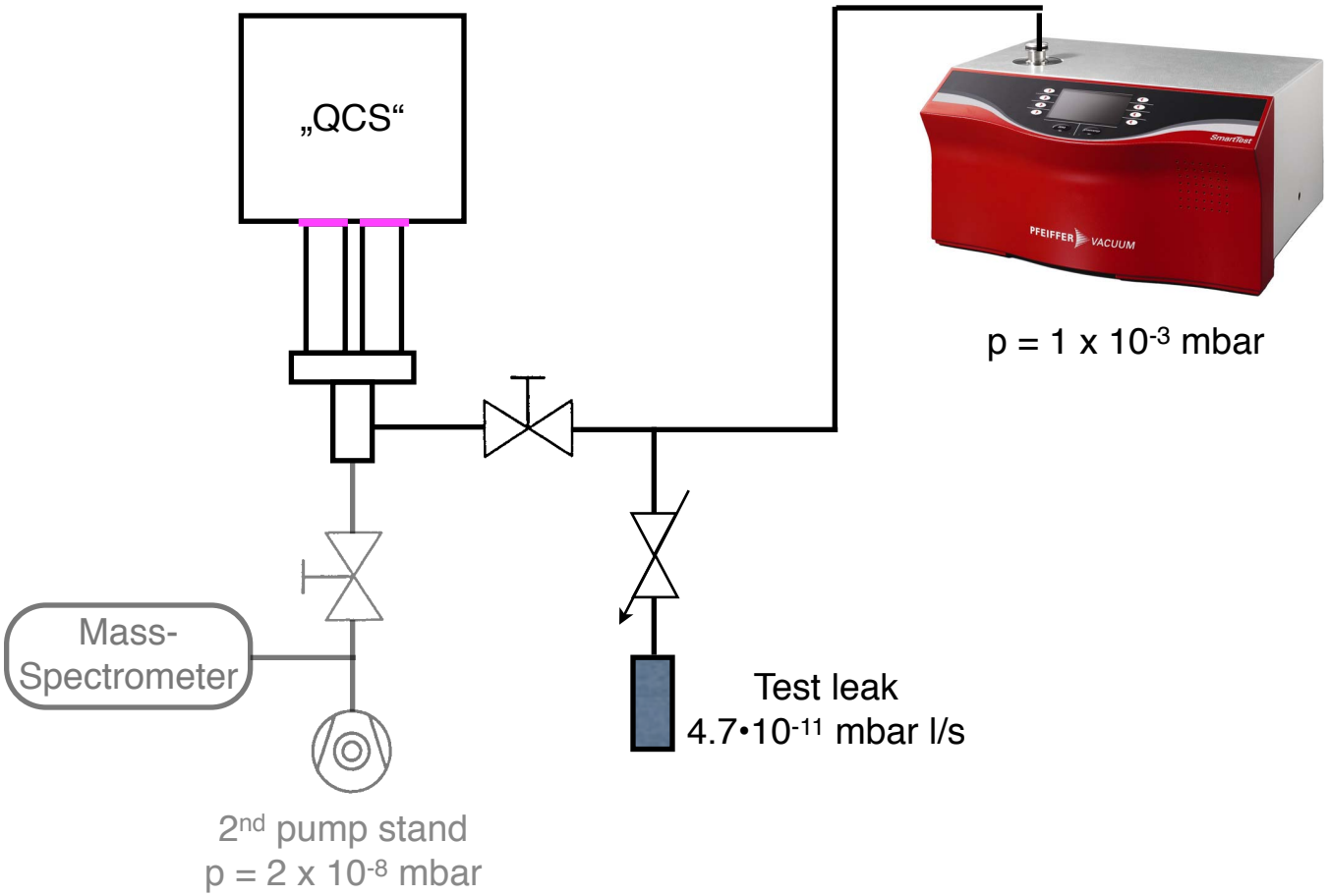

Integral Leak Test of IR Vacuum Seal

- Test complicated due to uneven outer envelope of test volume
  1. plastic bag and sticky tape
  2. build plexiglass box around set-up

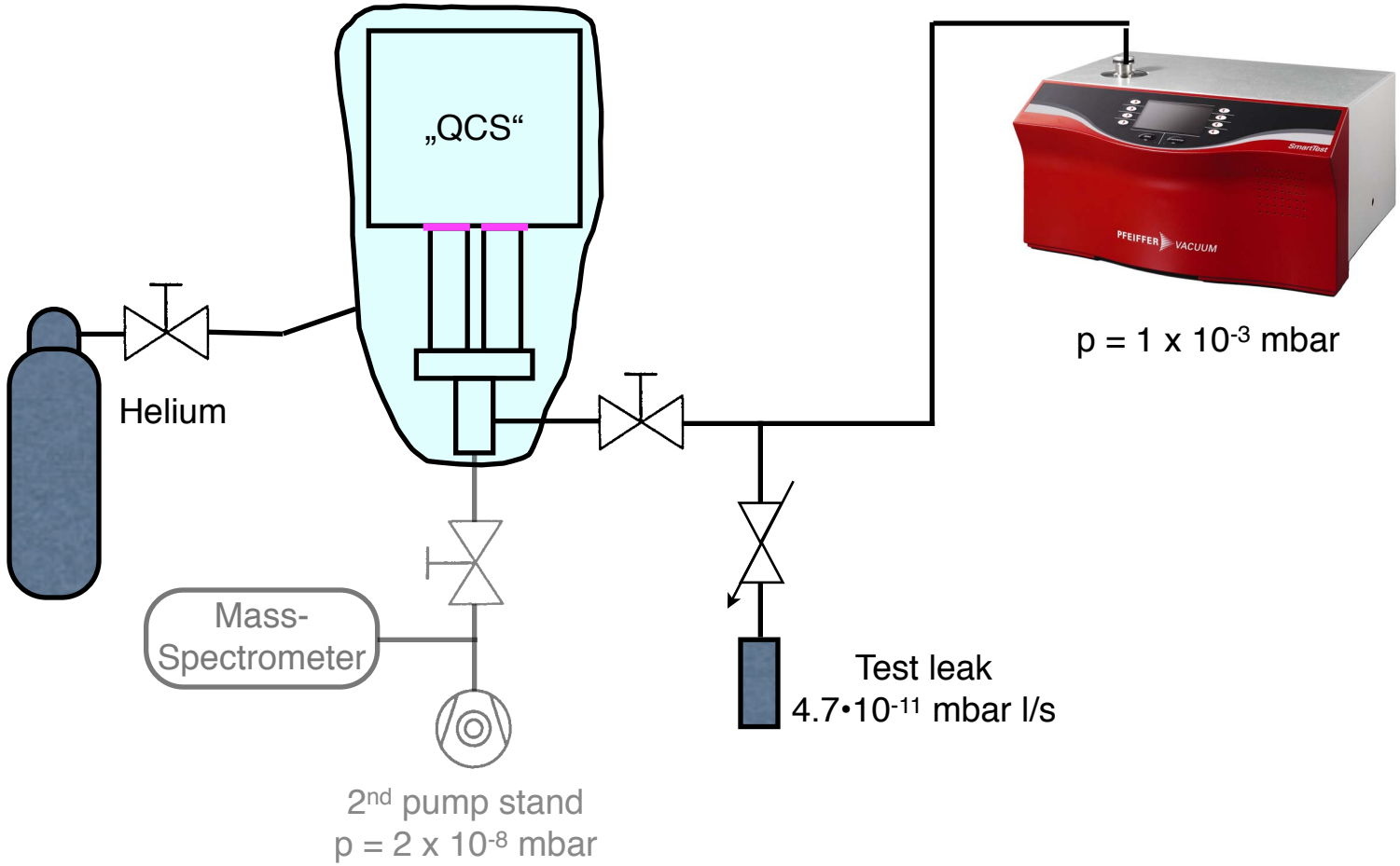

Integral Leak Test of IR Vacuum Seal

- Test complicated due to uneven outer envelope of test volume
  1. plastic bag and sticky tape
  2. build plexiglass box around set-up

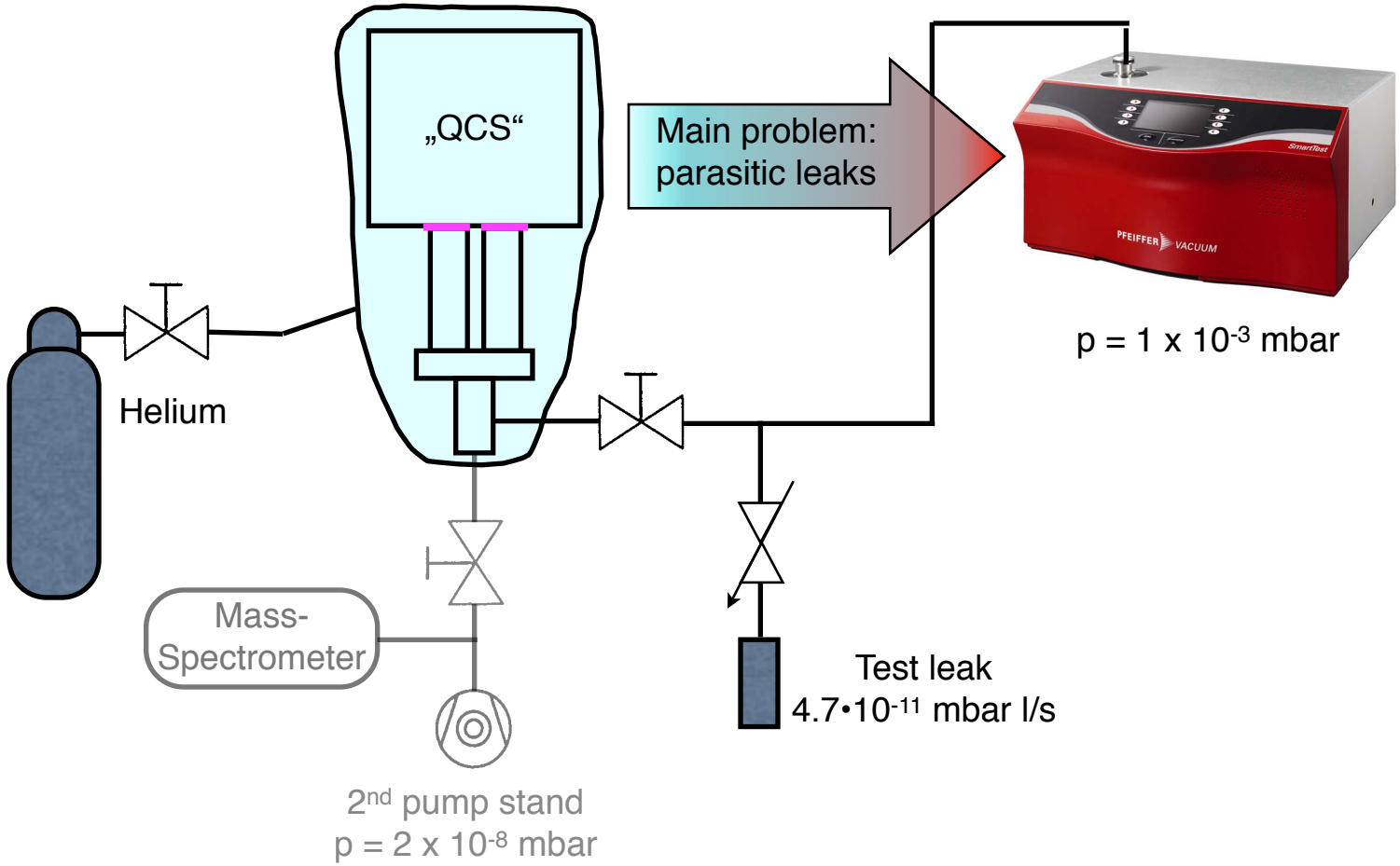

Set-up for Leak Search at IR Vacuum Seal

Position encoder

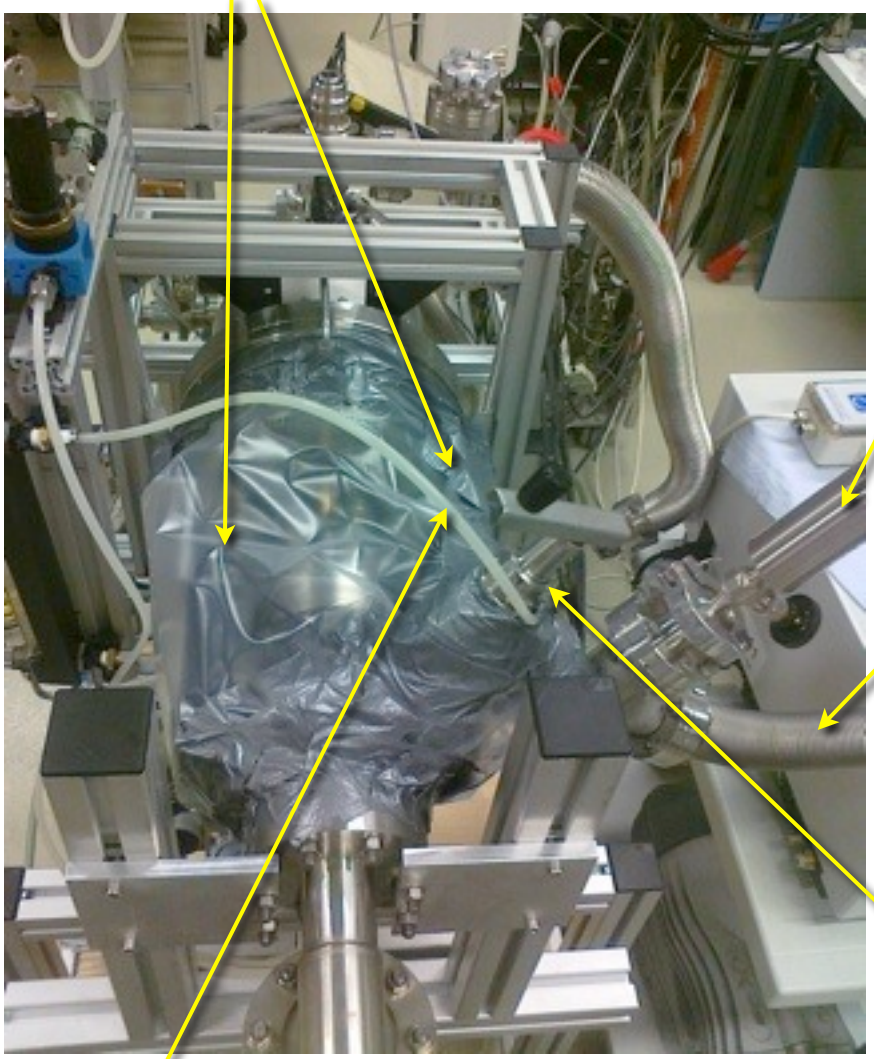

Test leak

Pipe to Pfeiffer SmartTest

Helium supply line

Valve between RVC & SmartTest

Improved Set-up for Integral Leaktest

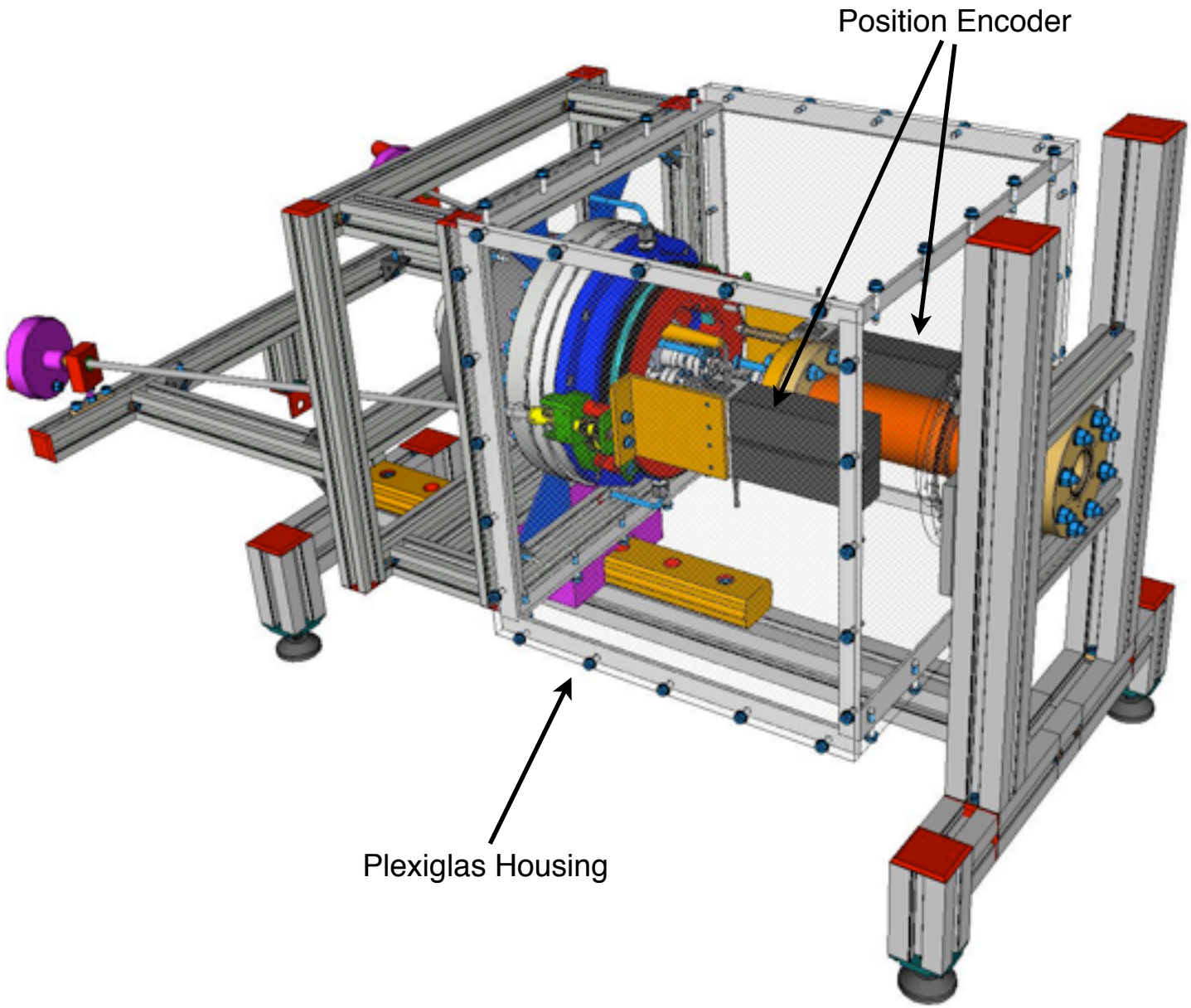

Leak Search at IR Vacuum seal

- Leak test repeated twice
- Significance of test presently limited by
  - tightness of Helium volume around RVC
  - Helium tightness of SmartTest itself
    - several rubber seals used inside leak tester which make it very sensitive to Helium level in the environment

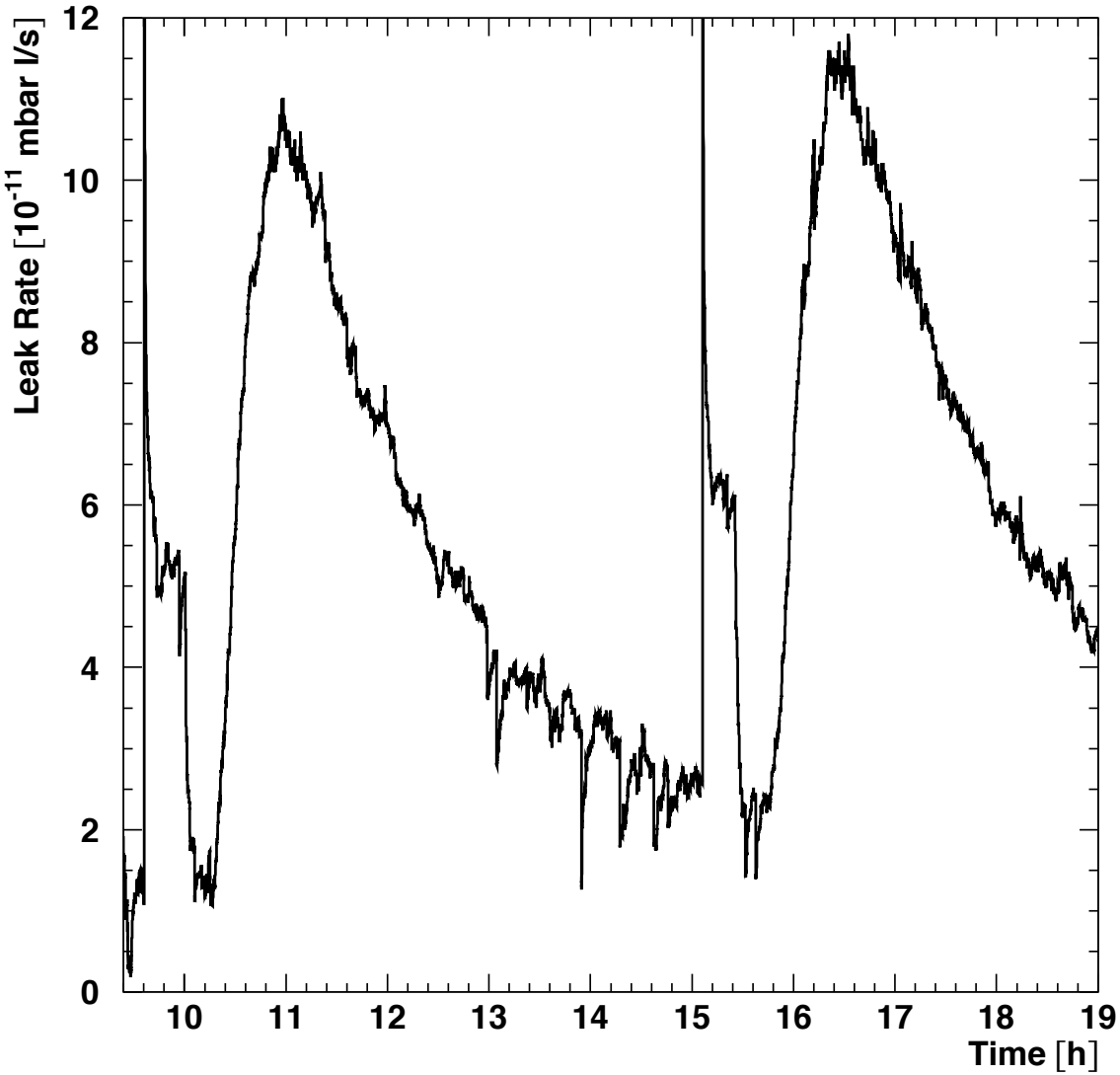

Leak Search at IR Vacuum seal

- Leak test repeated twice
- Significance of test presently limited by
  - tightness of Helium volume around RVC
  - Helium tightness of SmartTest itself
    - several rubber seals used inside leak tester which make it very sensitive to Helium level in the environment

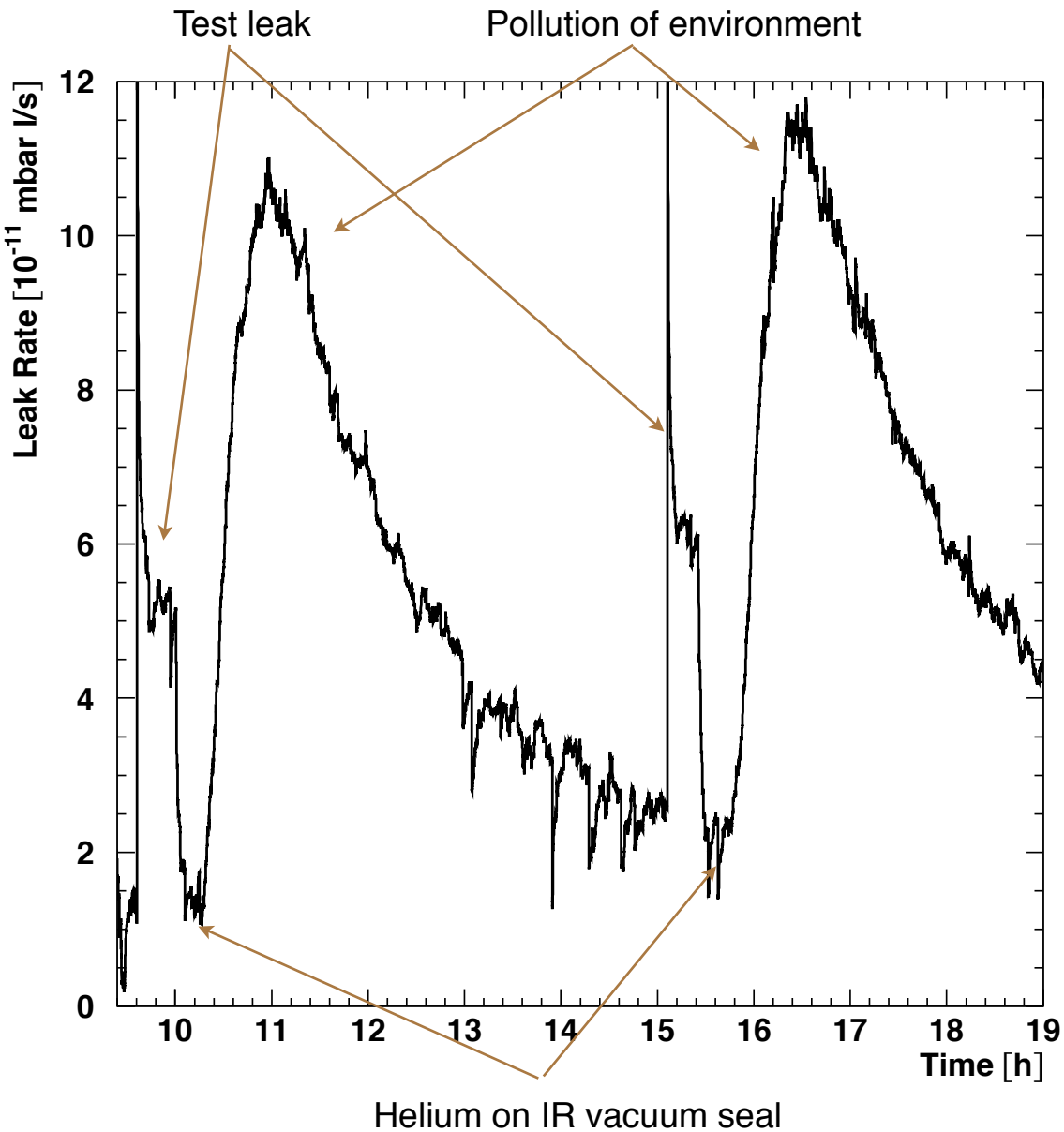

Getting the Box tight ...

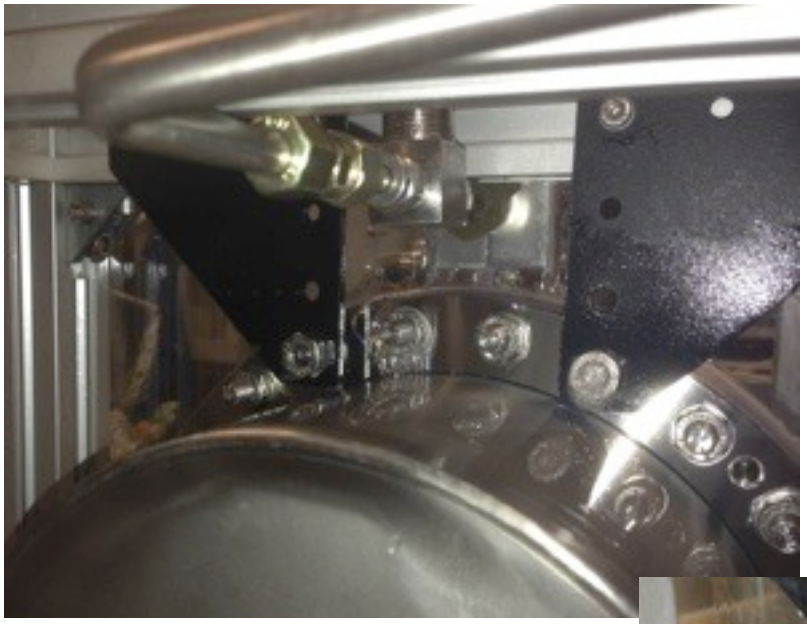

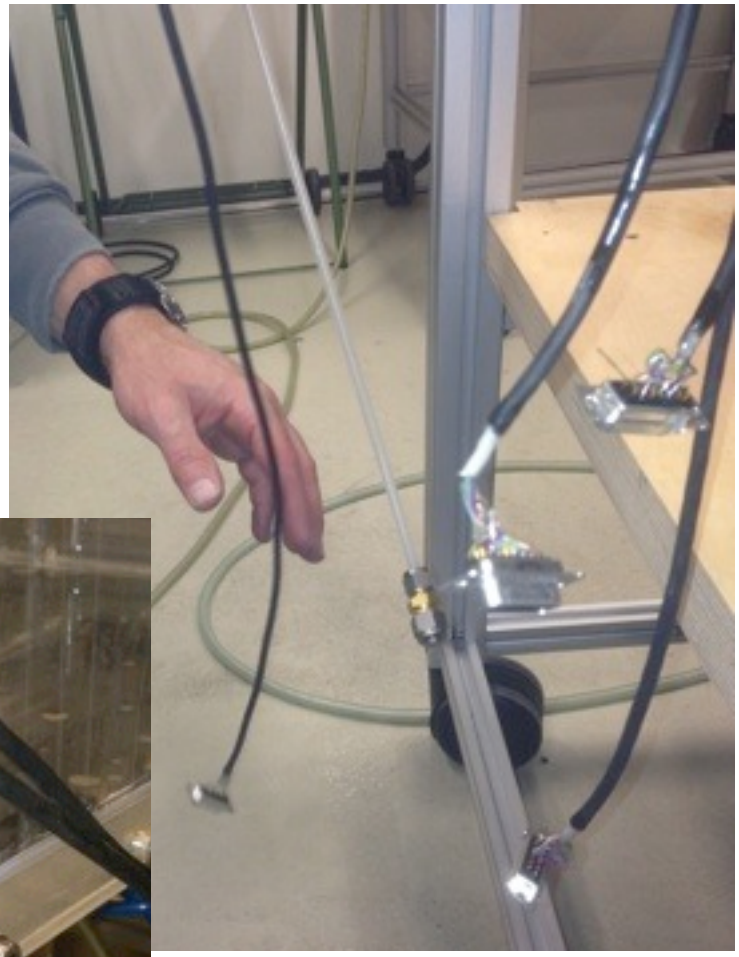

Final Set-up

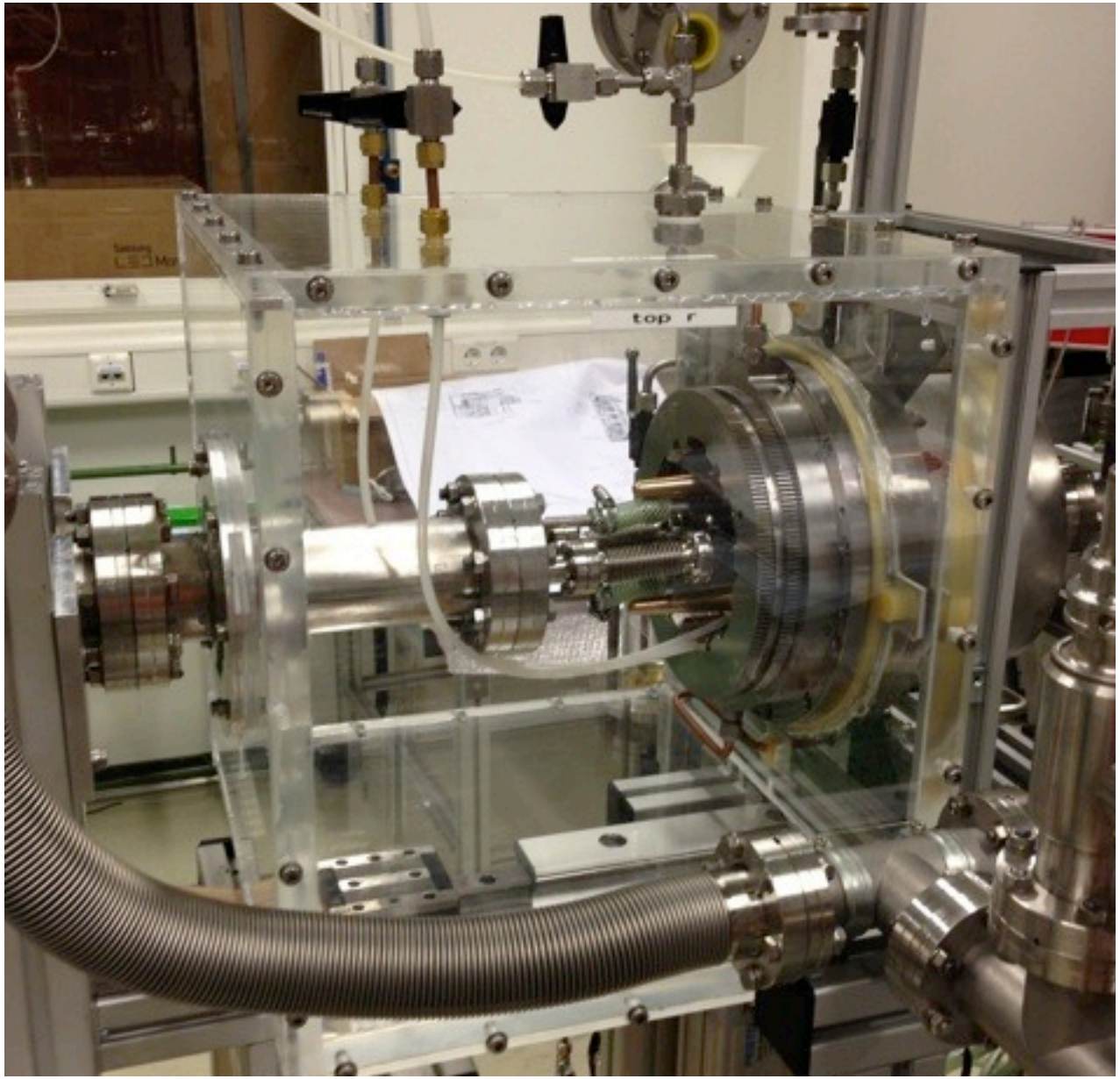

Integral Helium Leak Test on May 7

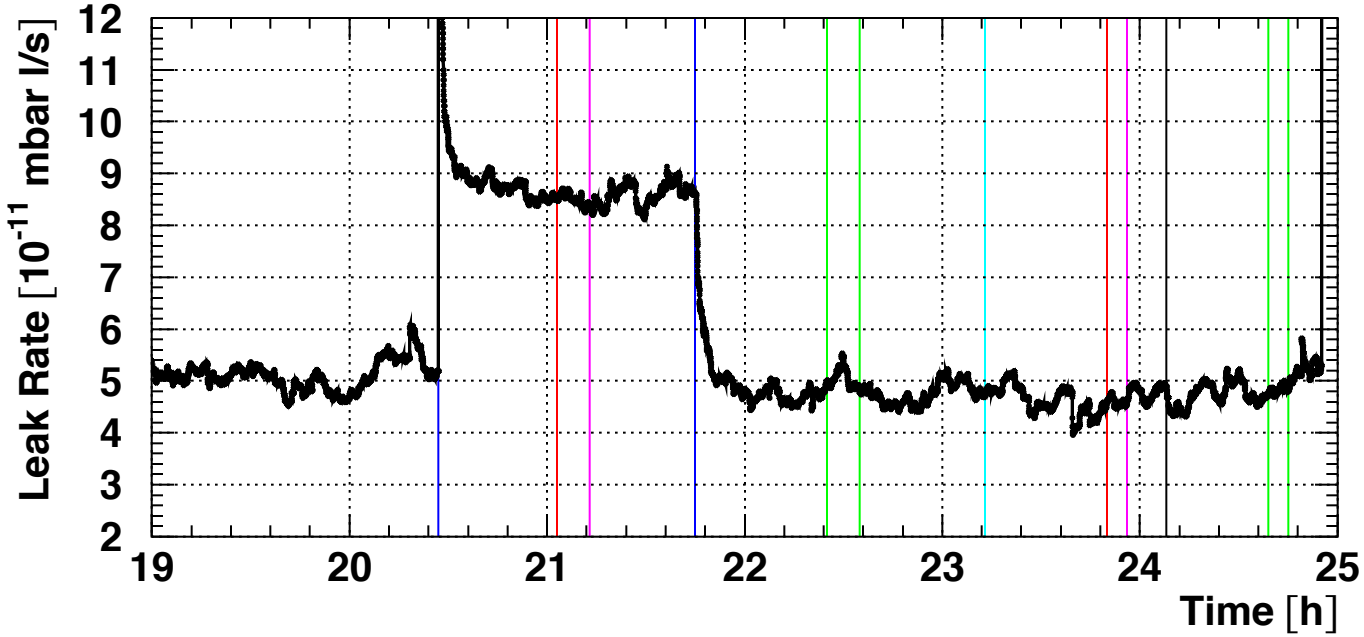

Integral Helium Leak Test on May 7

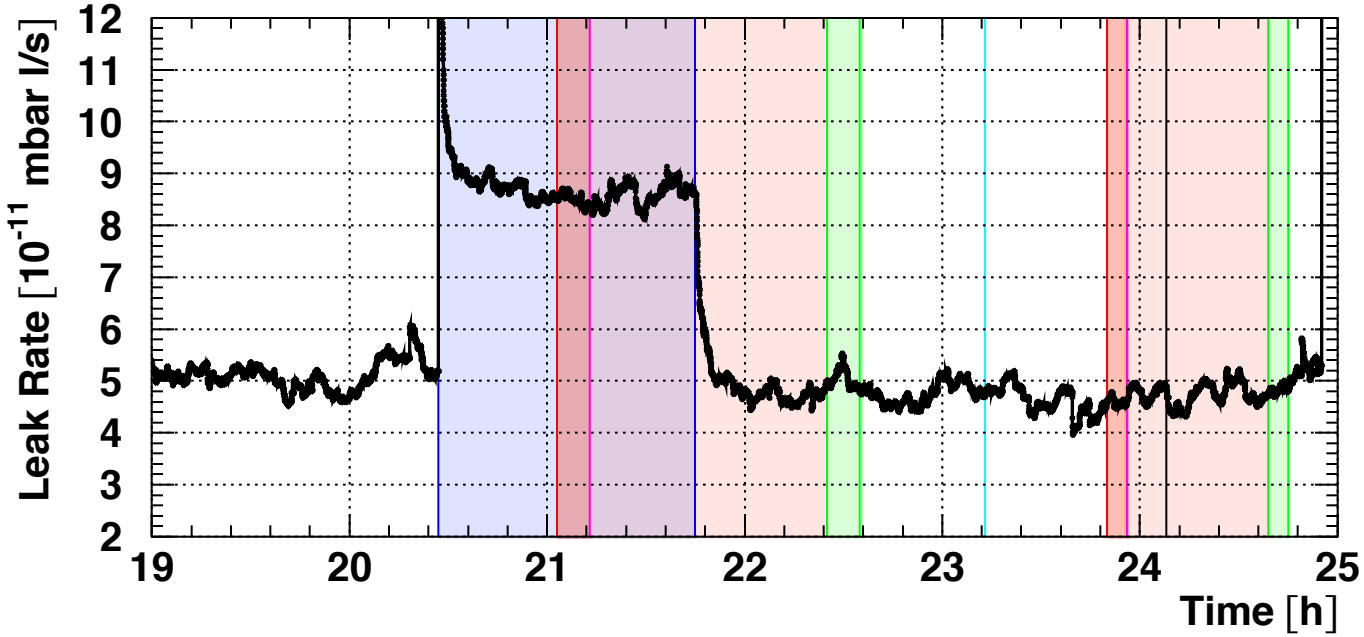

Integral Helium Leak Test on May 7

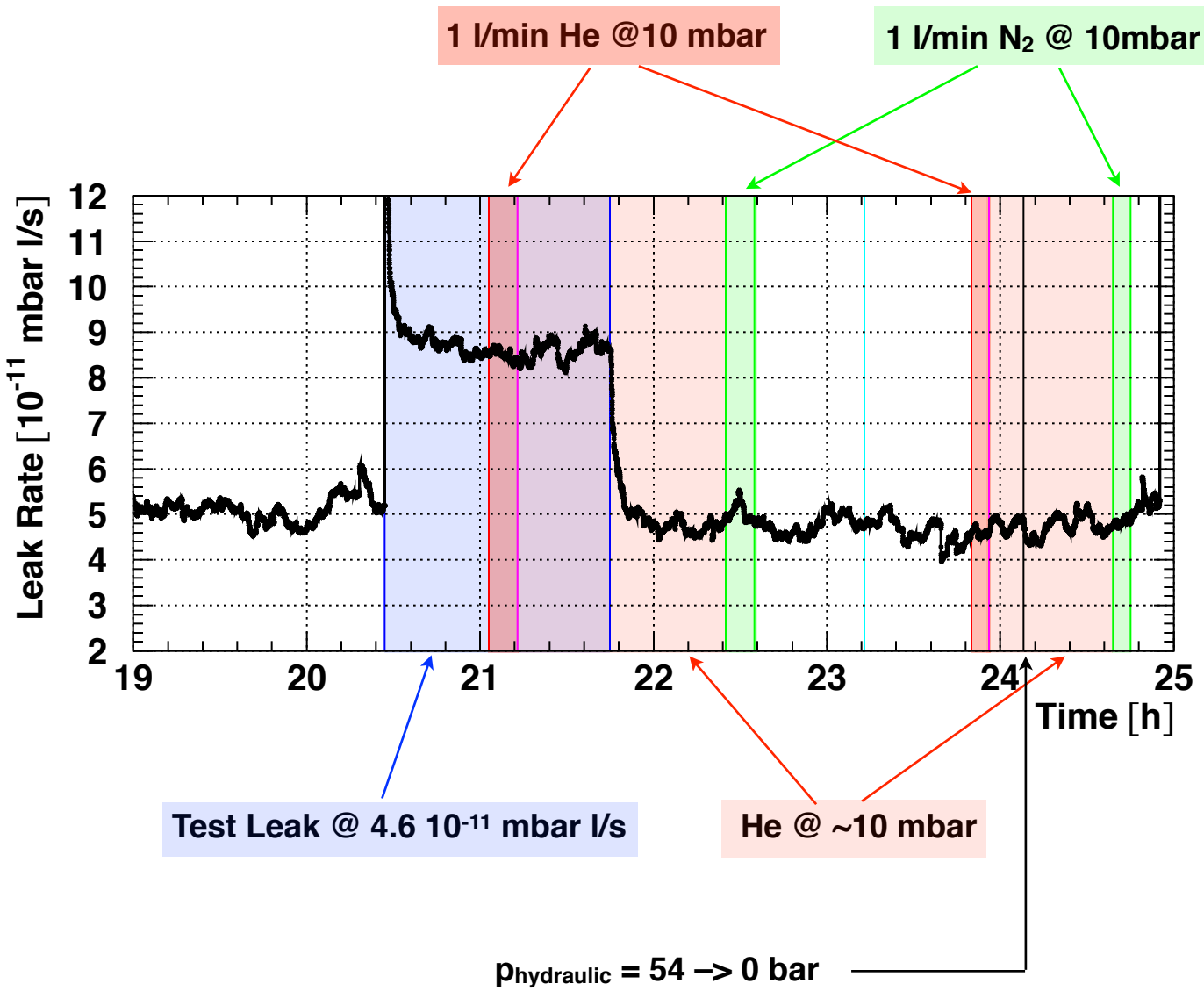

Integral Helium Leak Test on June 12

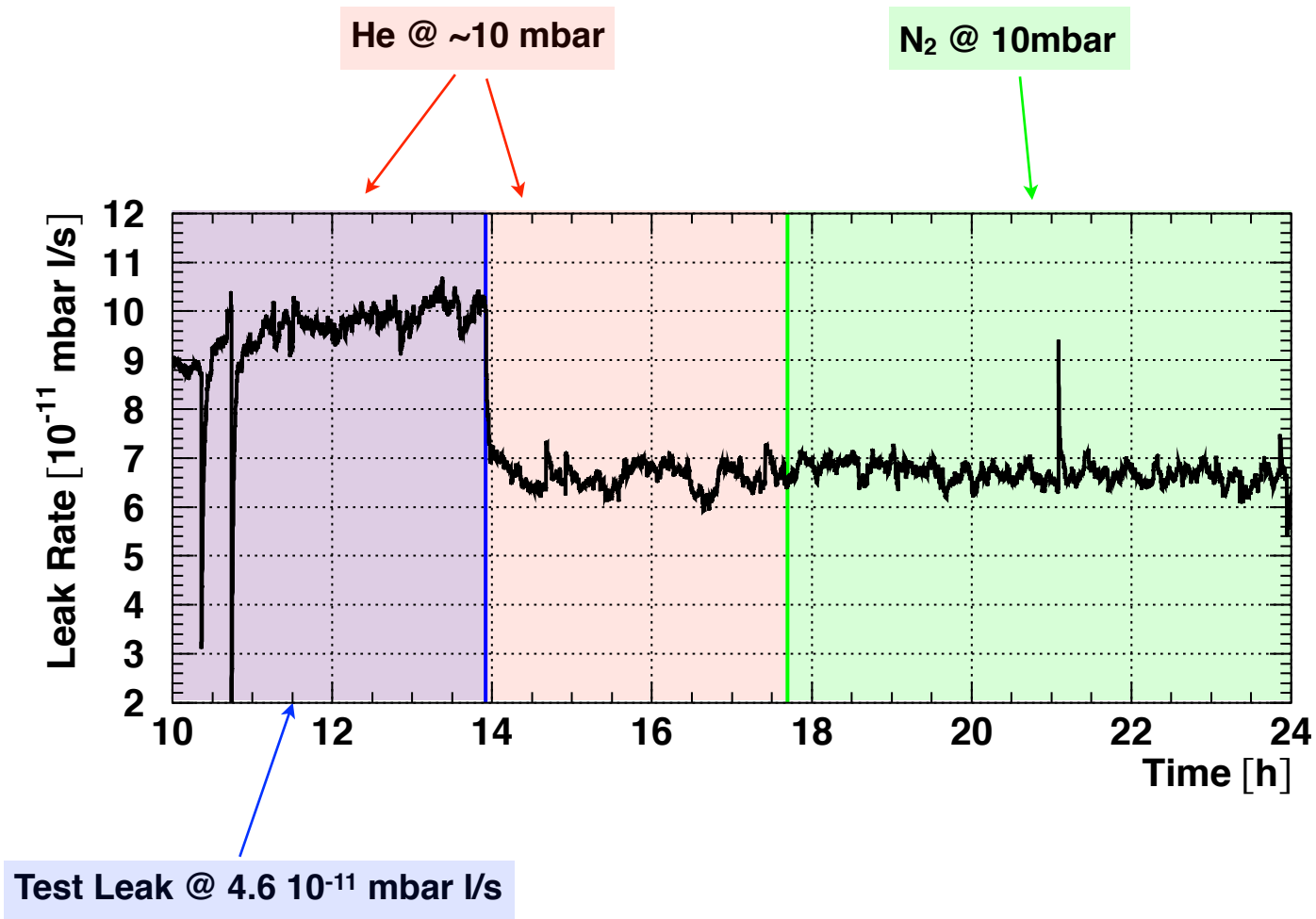

- Result of „longterm test“
  - vacuum seal still Helium-tight after > 4 weeks
  - continuation problematic since we now have to return leak tester to vacuum group

Status

- SuperKEKB vacuum group (Kanazawa-san) will consider RVC as possible solution for backward side
  - in case of failure it should „somehow“ be possible to disconnect VXD from QCSL

- In forward direction presently KEK wants to stay with baseline option
  - cutting bellows in case of emergency is not acceptable
  - convinced that baseline solution will work

- Meanwhile we think that VXD and QCSR can be extracted together in case of failure of forward RVC also in alternative installation scenario
  - details have to be worked out
  - new MPI engineer starting next week on details of alternative installation procedure

Conclusions & Next Steps

- We are convinced that the RVC works reliably
- Continue longterm test, but have to return leak tester back very soon
- Wait for comments from Kanazawa-san
  - beam pipe inside QCS will be made from tungsten
  - further possible modifications
    - size of operating heads can be reduced
      - gain space for PXD cables and cooling pipes
    - instead of hydraulic oil can use pressurised gas
      - avoid possible leakage of oil
    - change to heavy metal
      - improve shielding against background
- Build second copy and send to KEK for detailed studies