Status of MARCO/IBBelle and SVD thermal mockup

VXD Overview

SVD

1748 APV25 chips
~ 0.4W / chip
~ 700W in total

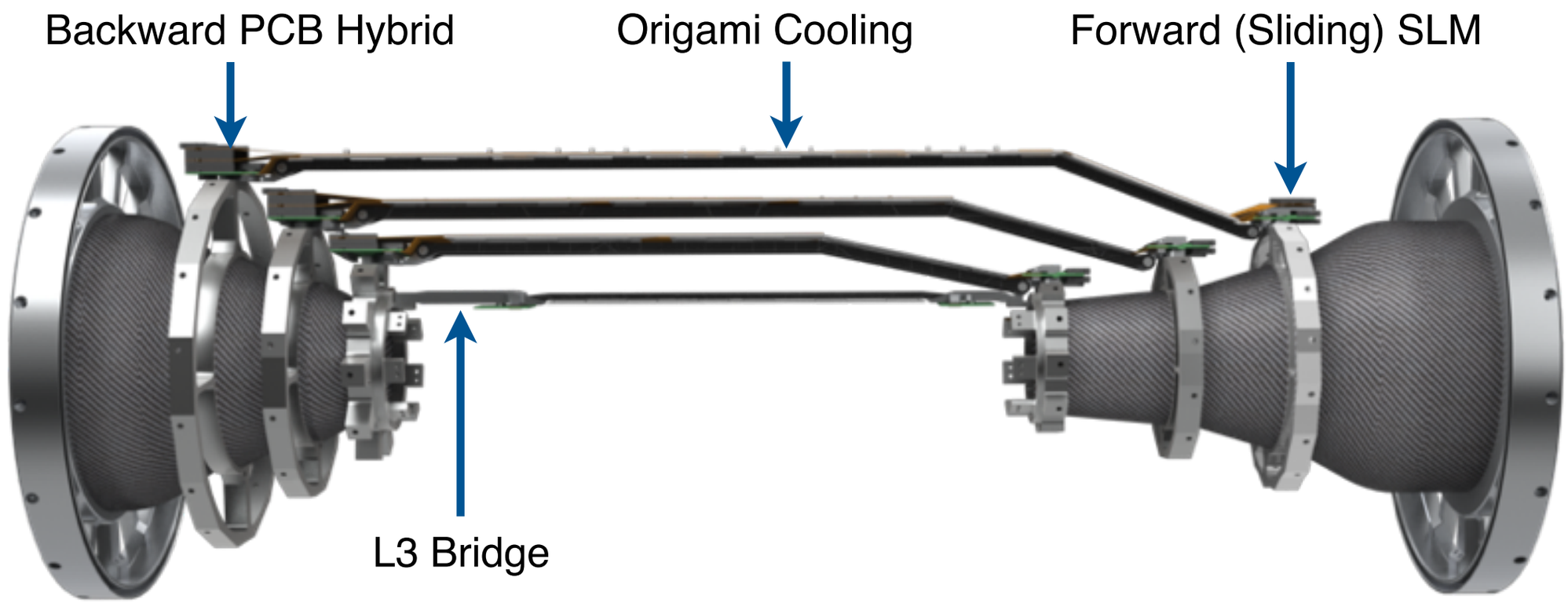

PXD

18W per ladder
~ 360 W in total

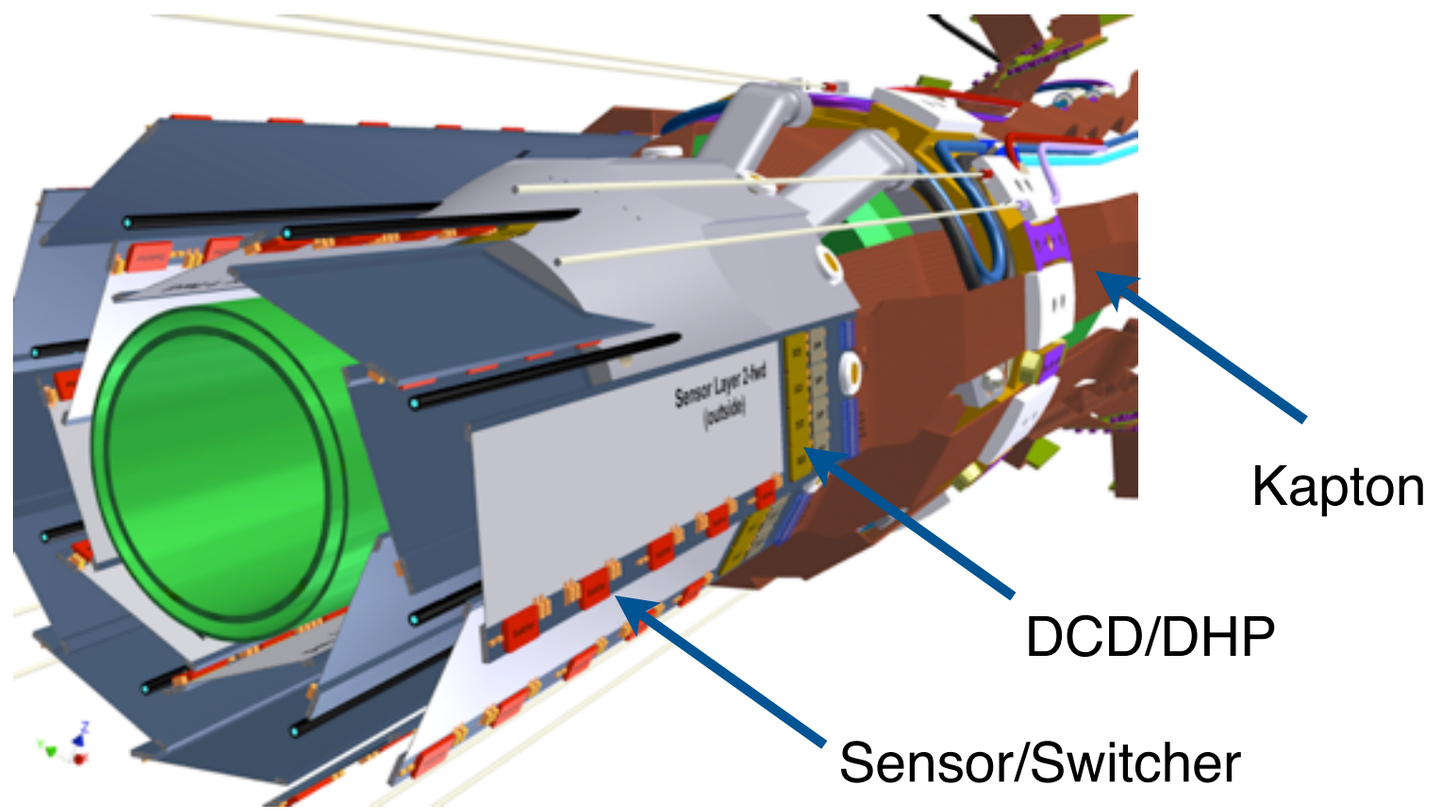

Cooling Environment

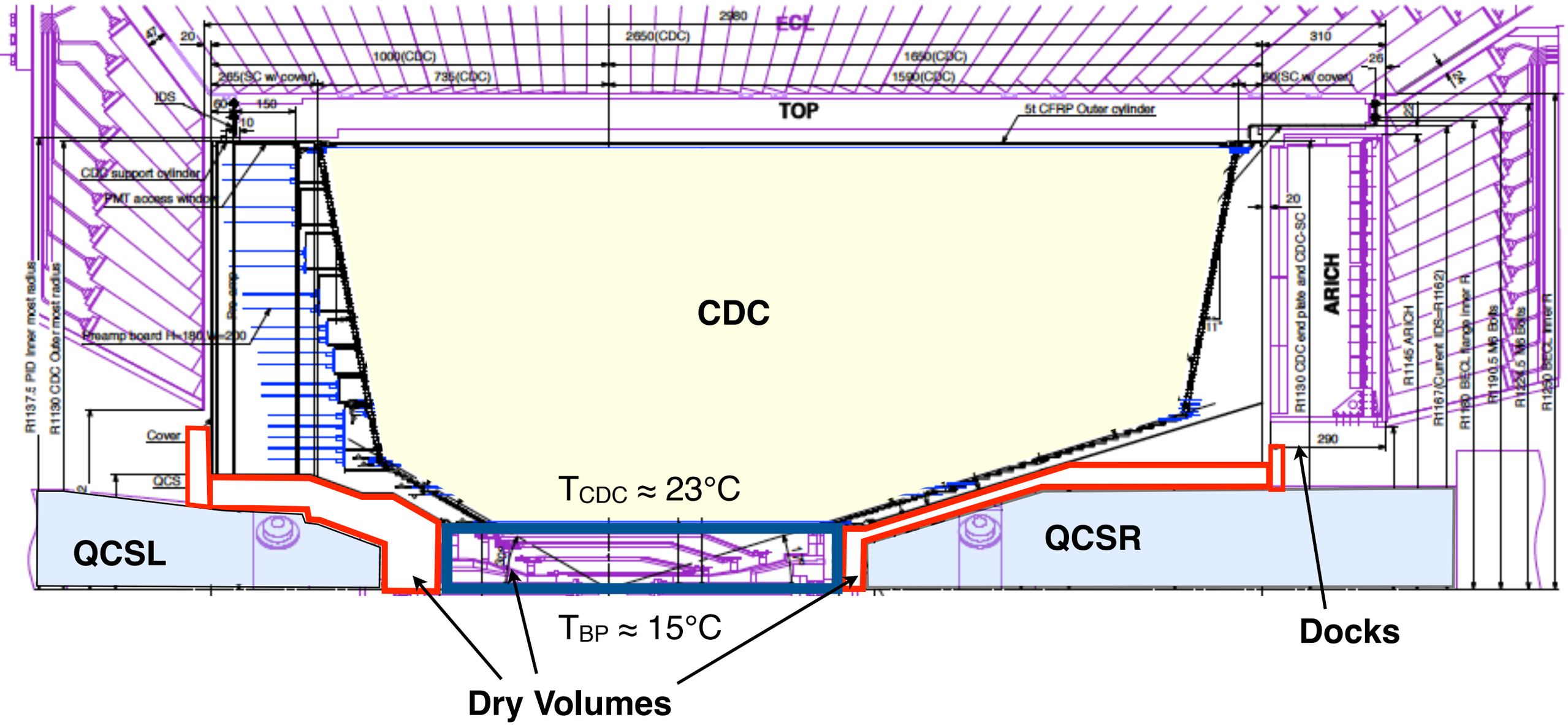

Steps Towards Realistic VXD Thermal Mockup

- PXD
  - Final design of backward and forward SCBs (MPI)
  - Thermal dummy sensors with final geometry (HLL)
  - Kaptonflex cables (simplified version for power lines) (MPI)
- SVD
  - CFRP support cone & outer cover (KEK)
  - SVD endrings (DESY)
  - SVD endmounts (KEK)
  - VXD endflange (Uni HH)
  - SVD thermal dummy ladders (DESY, HEPHY)
  - SVD cooling pipes (DESY)
- CDC inner structure (Uni HH)

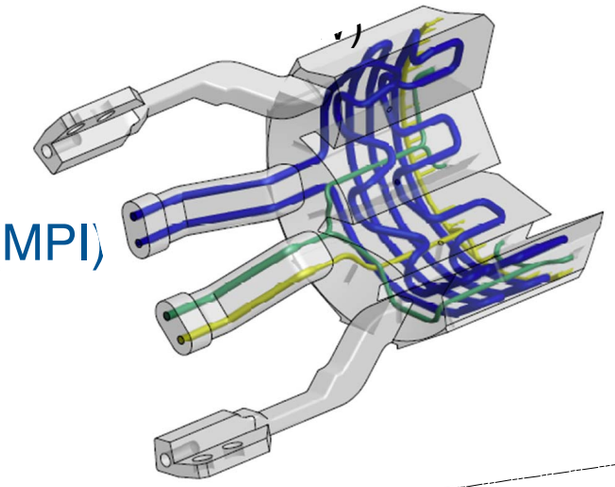

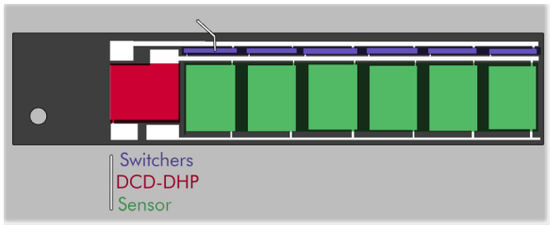

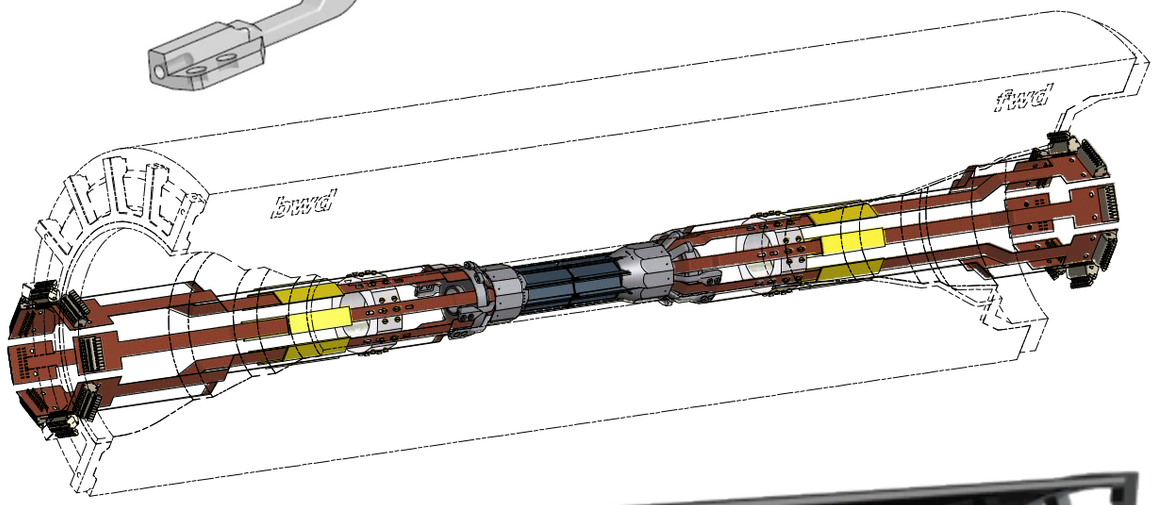

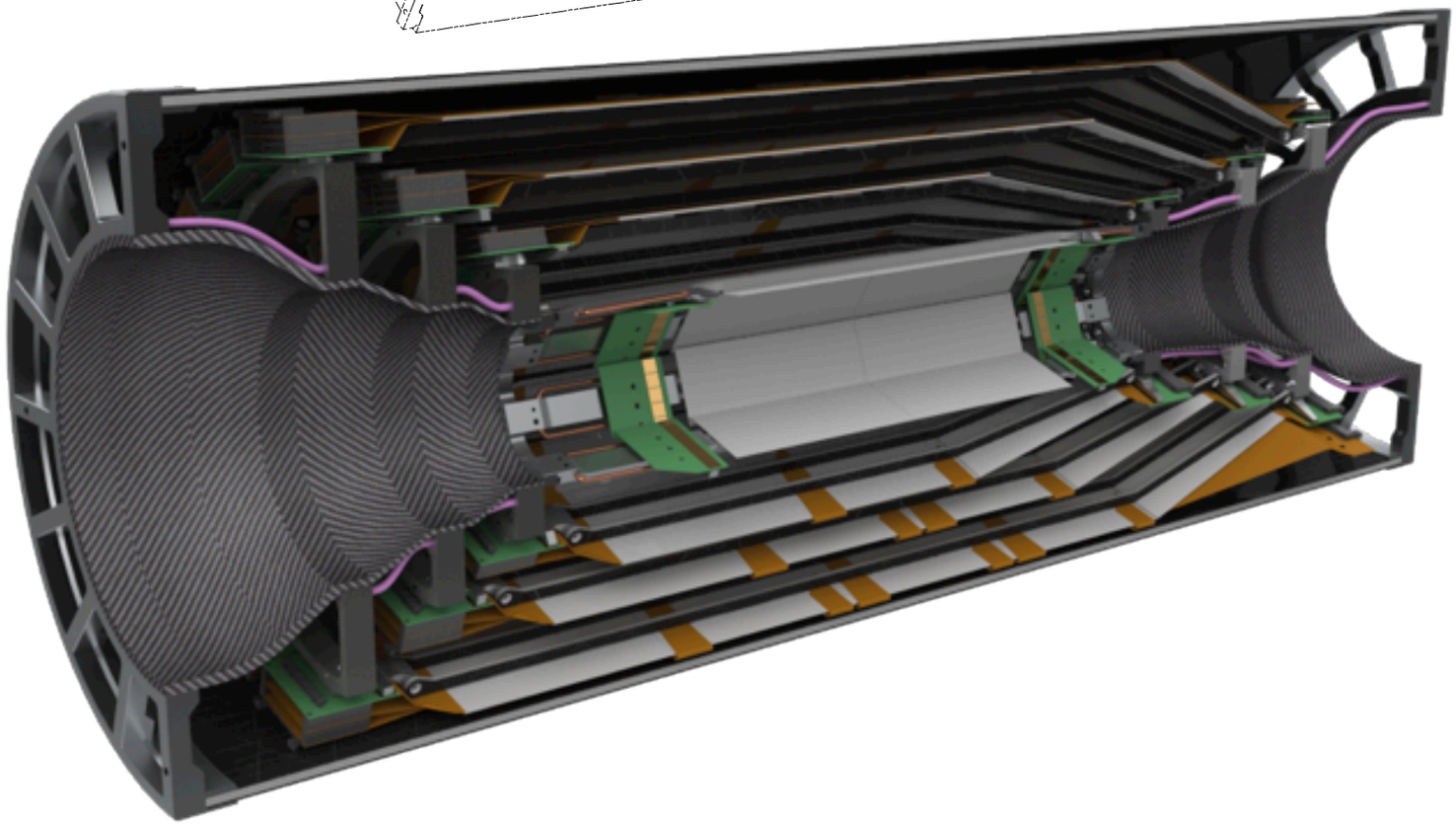

Realistic PXD Thermal Mock-up

See previous talk by C.Kiesling

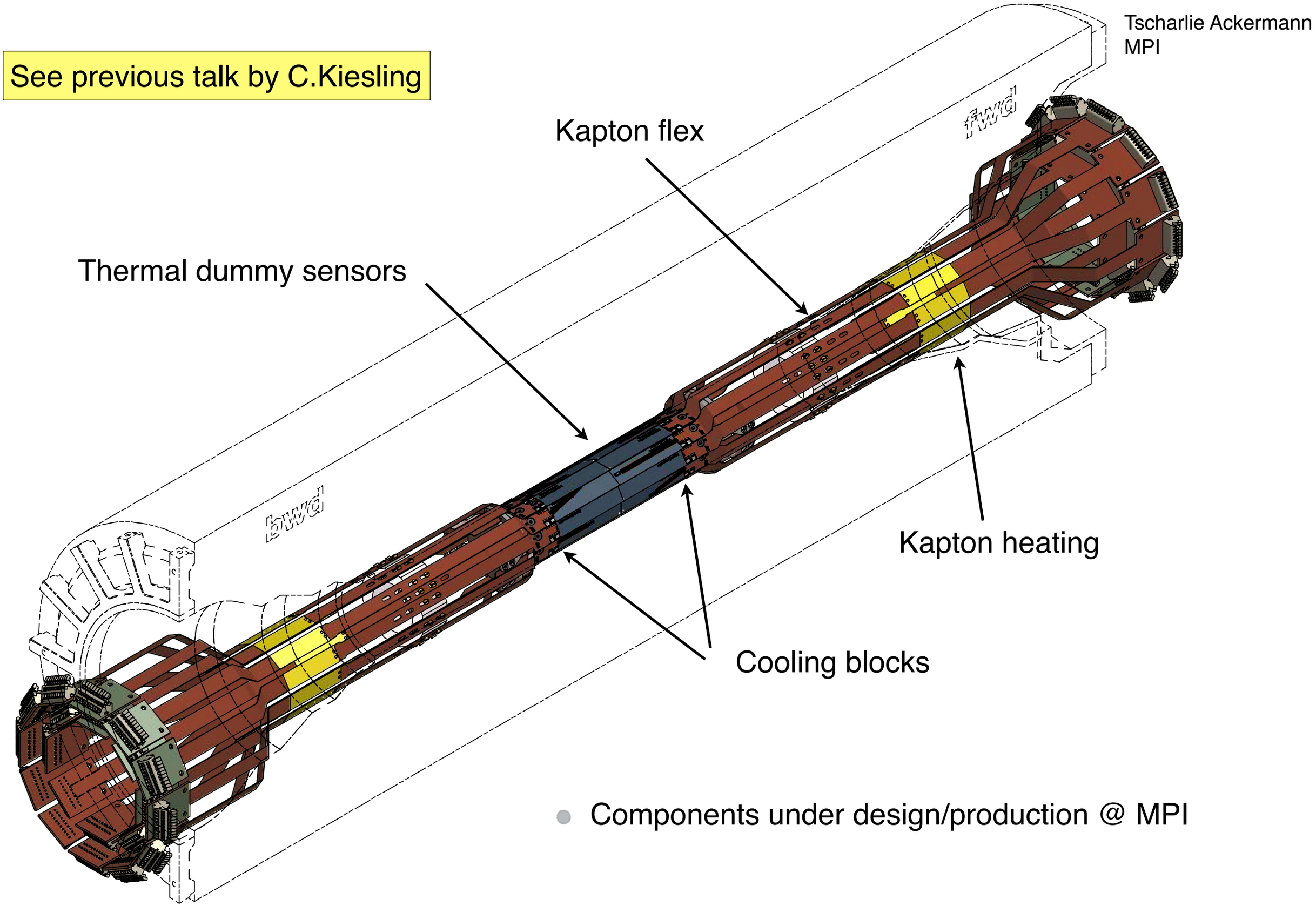

- Components under design/production @ MPI

Support Structures for SVD Thermal Mockup

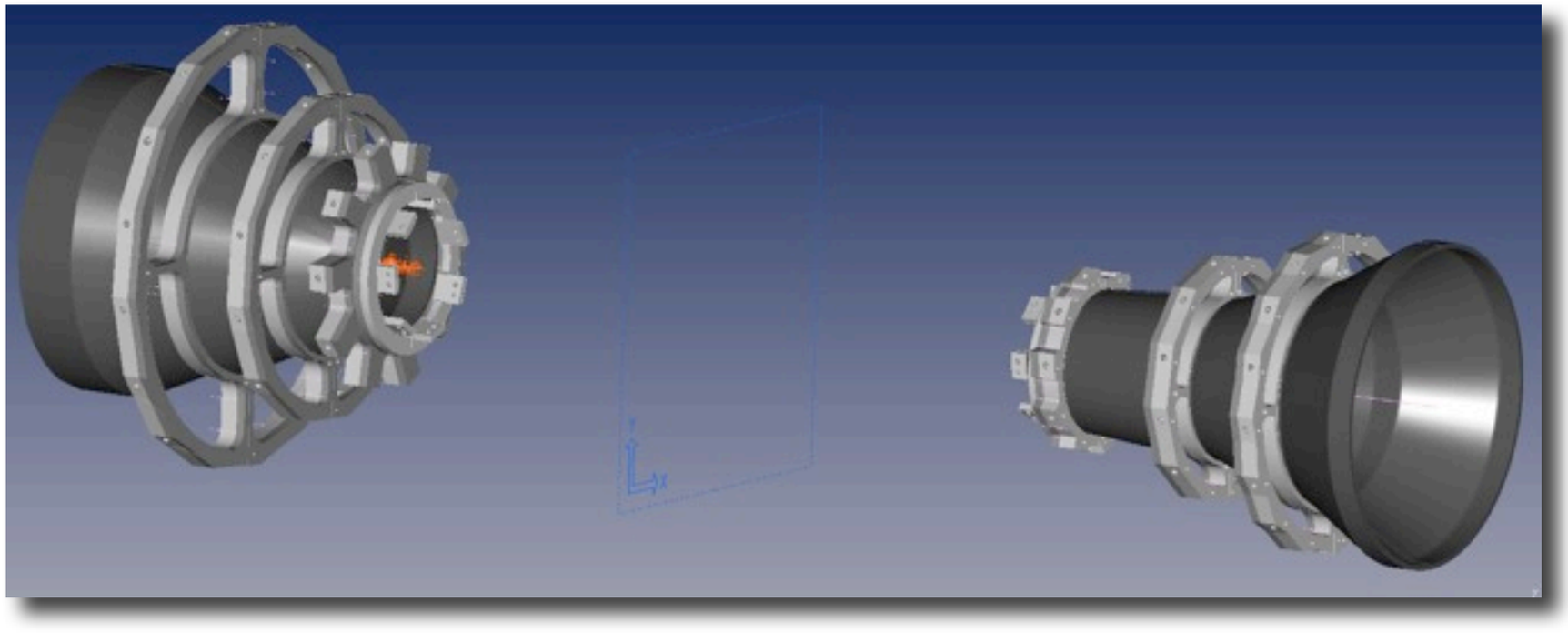

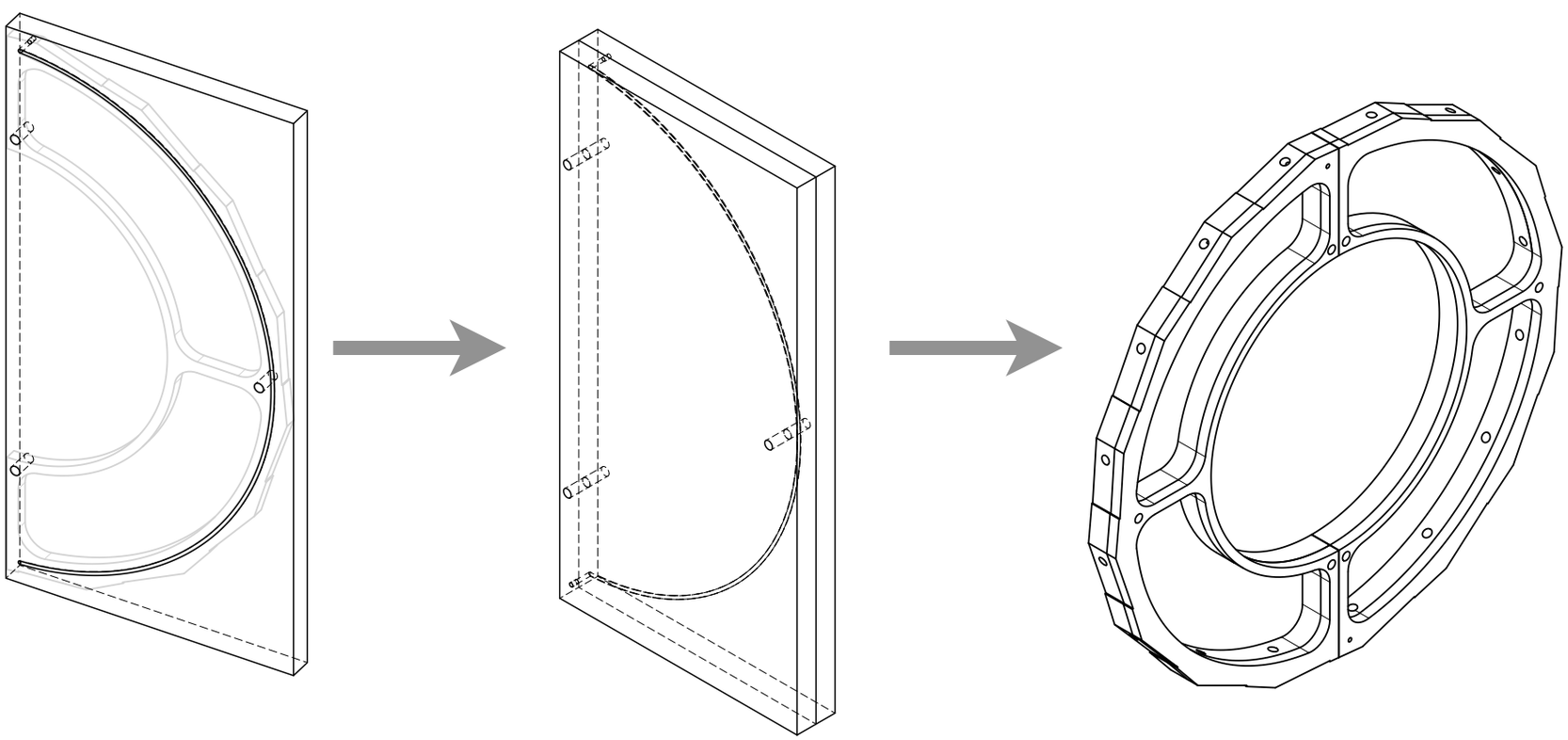

Diffusion welding

- Three sets of CFRP support cones & outer cover have been produced at KEK
  - one set is on its way to DESY
- SVD endrings
  - final adjustments to the design finished last week
- Endring production at DESY
  - integrated cooling channel and very high mechanical precision required
  - pursuing two alternative approaches
    - diffusion welding of individual pieces
    - 3D laser sintering
- Exercise alternative assembly procedure for SVD support structure

SVD Endring Production

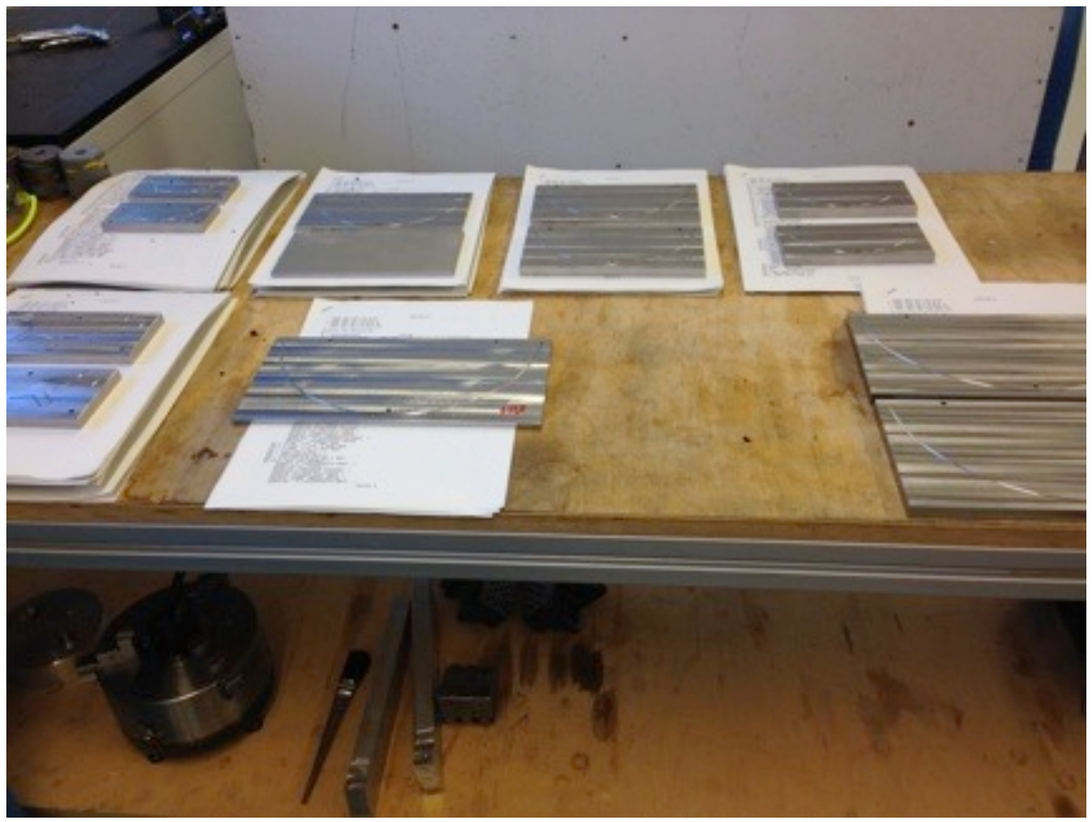

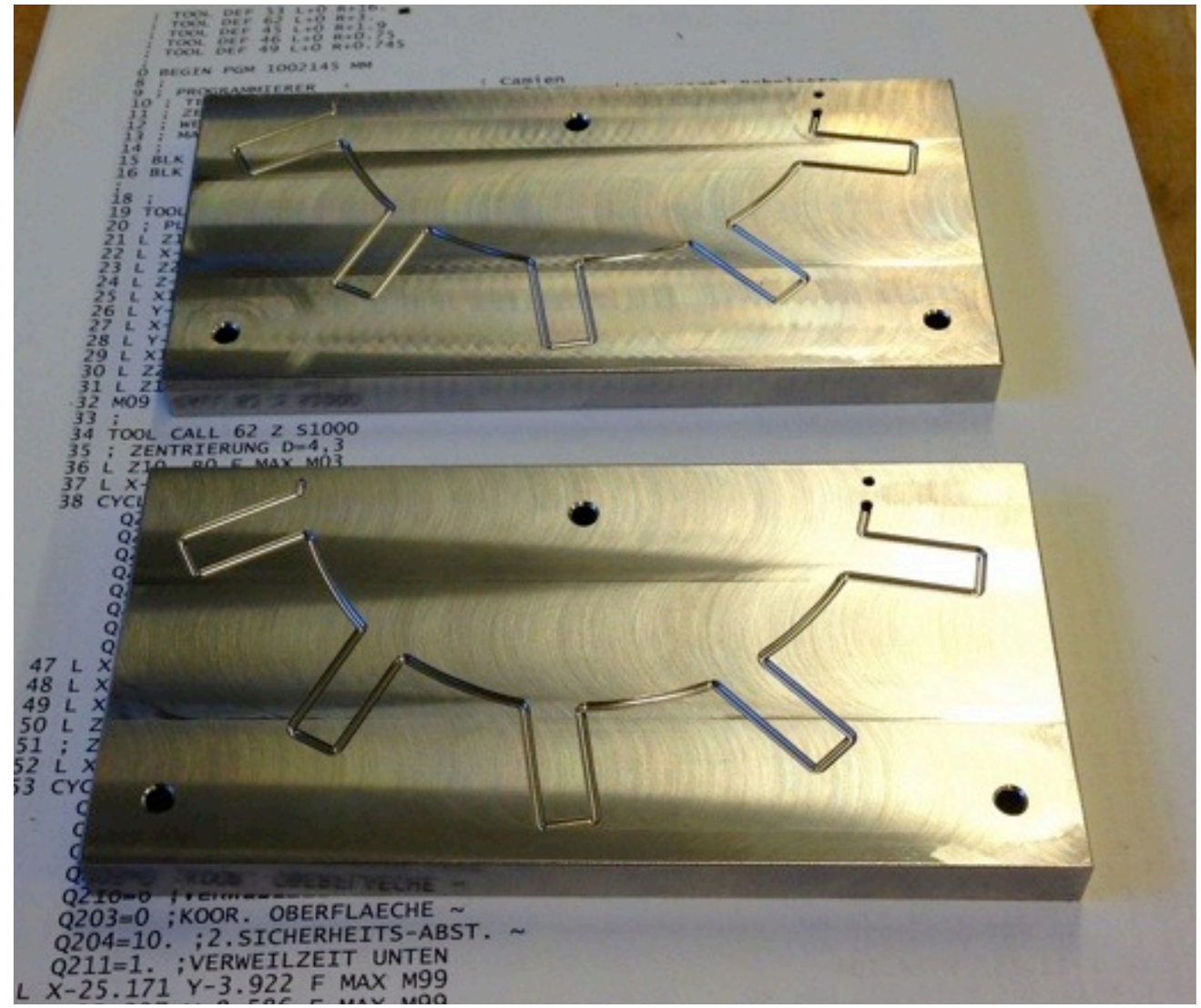

Preparation of individual parts done at DESY workshop (C.Camien)

Test Production of L34 Endring

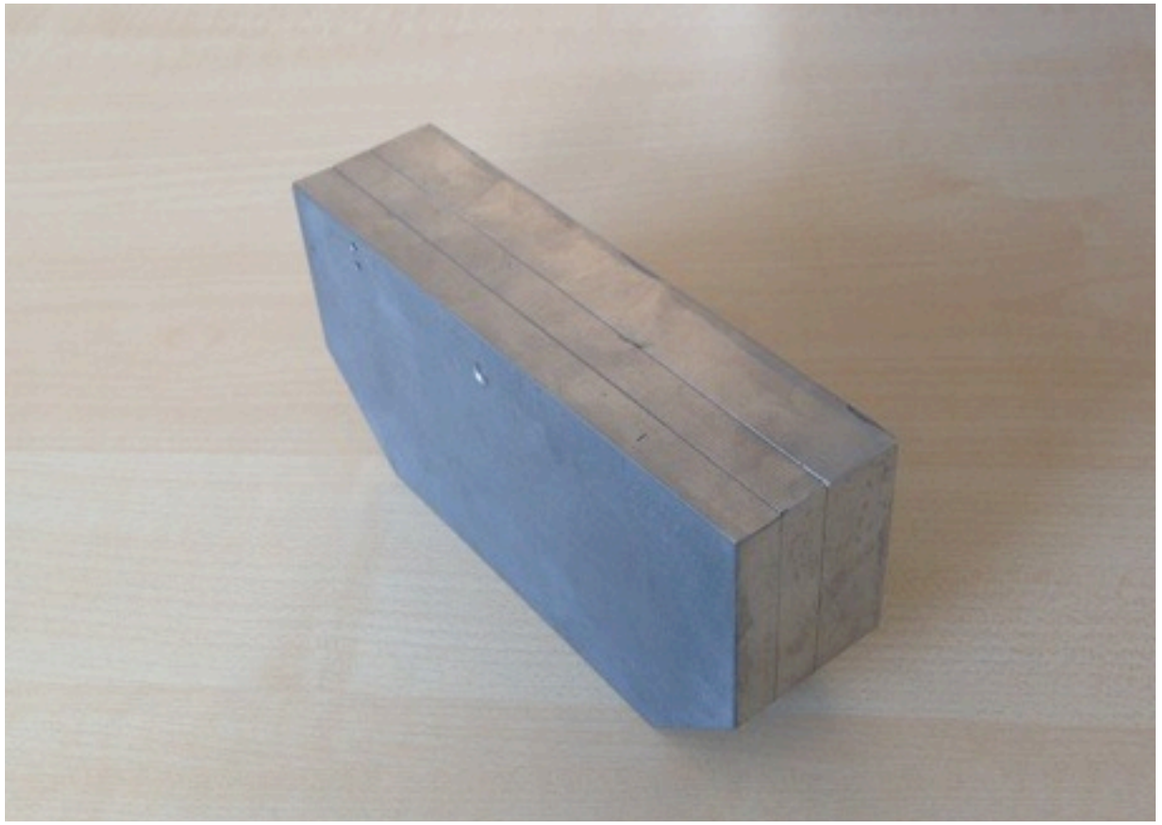

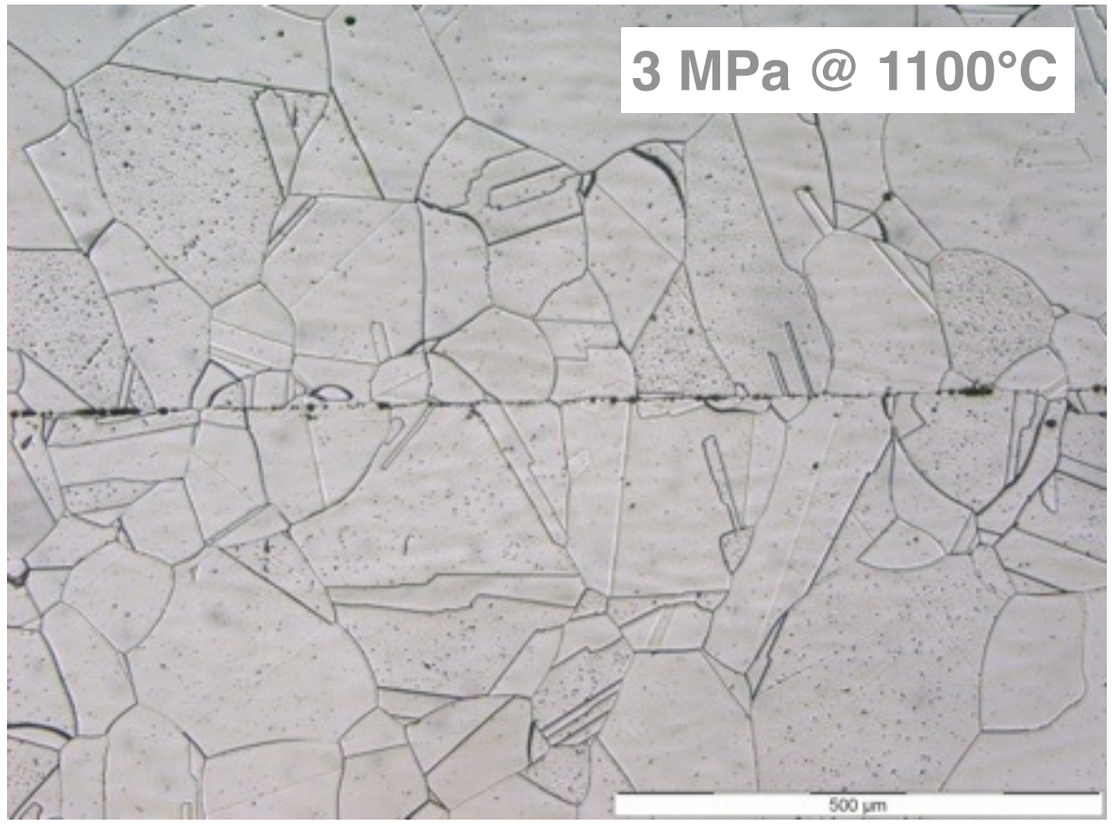

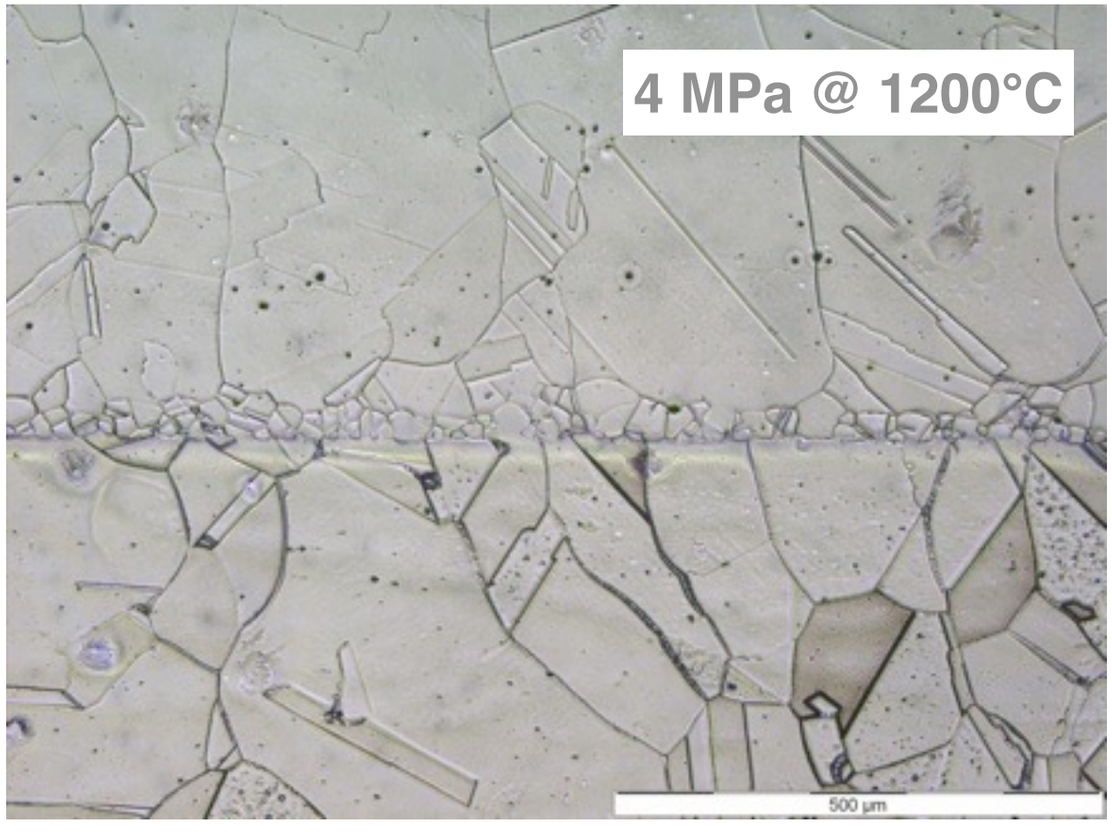

- Diffusion welding of 3 individual plates
  - Institut für Fügetechnik und Werkstoffprüfung ifw Jena
- L34 used to determine process parameters
  - temperature & pressure
  - area of endring L6 at the limit
- Remaining pieces will be processed next week
- Milling of welded parts beginning of June
- Pressure test and comparison of two approaches
  - bring both L34 endring prototypes to June B2GM

SVD L34 Backward Endring by 3D Laser Sintering

- Prototype produced at Laserzentrum Nord
  - parts arrived yesterday
- Required precision of outer surface by machining at DESY
  - quality of integrated cooling channel still has to be established (roughness, level of cleanliness)

SVD Thermal Mockup Design

Layer 6

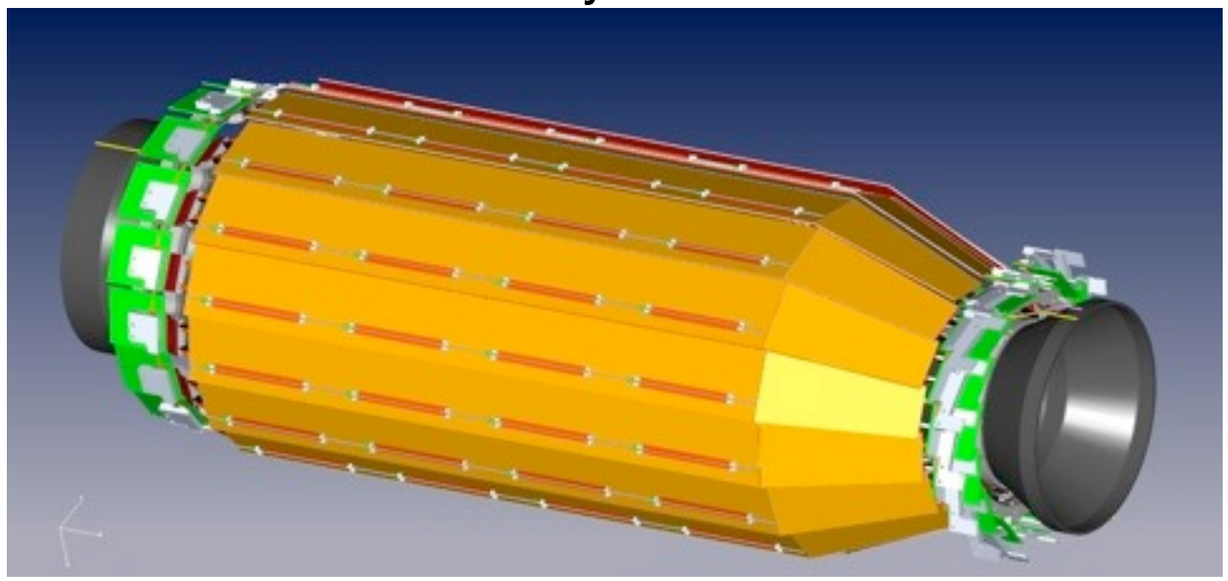

Layer 5

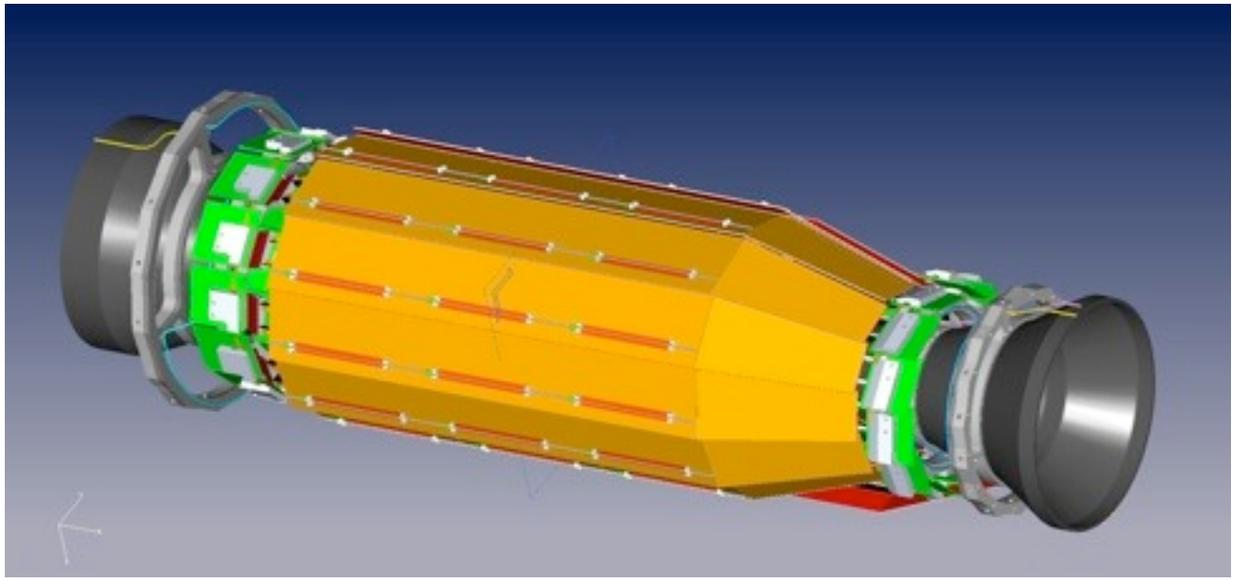

Layer 4

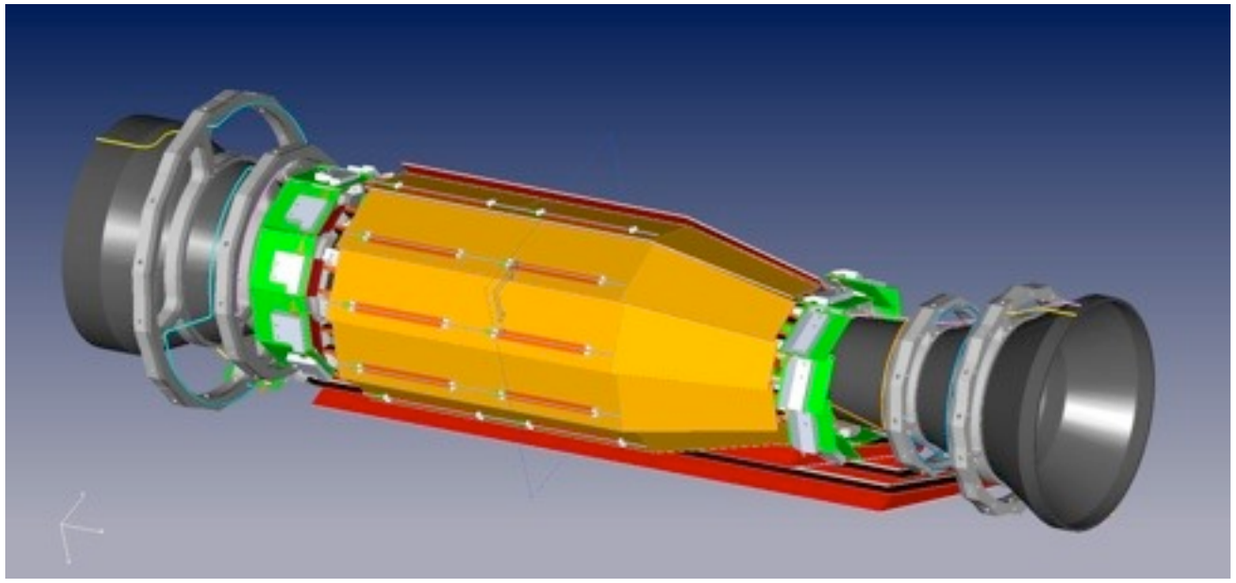

Layer 3

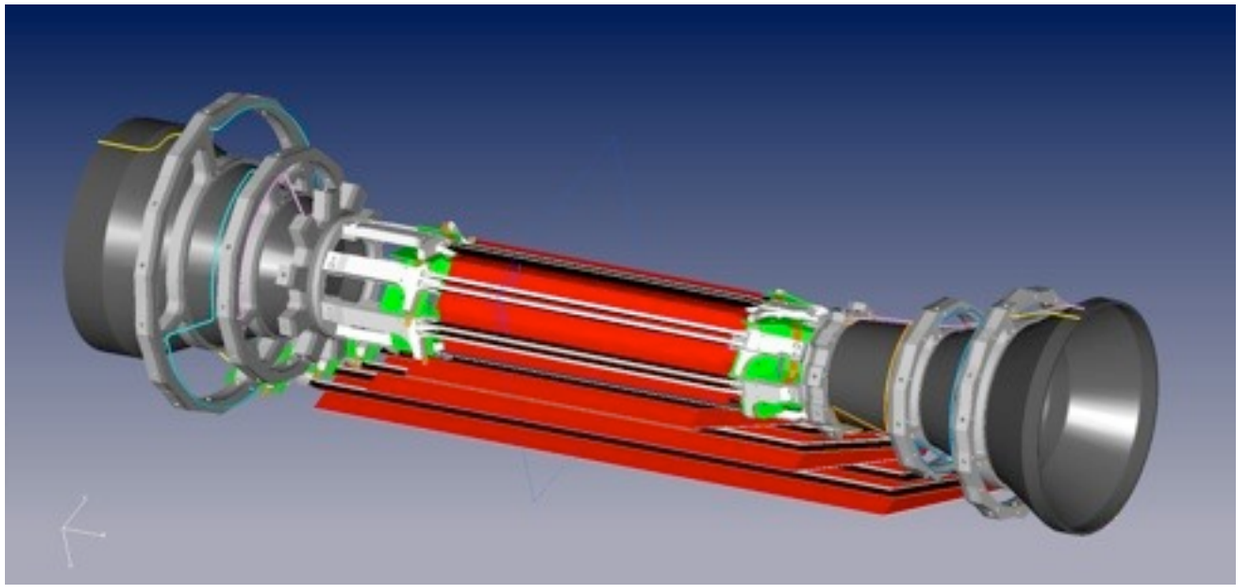

SVD Thermal Mockup Design

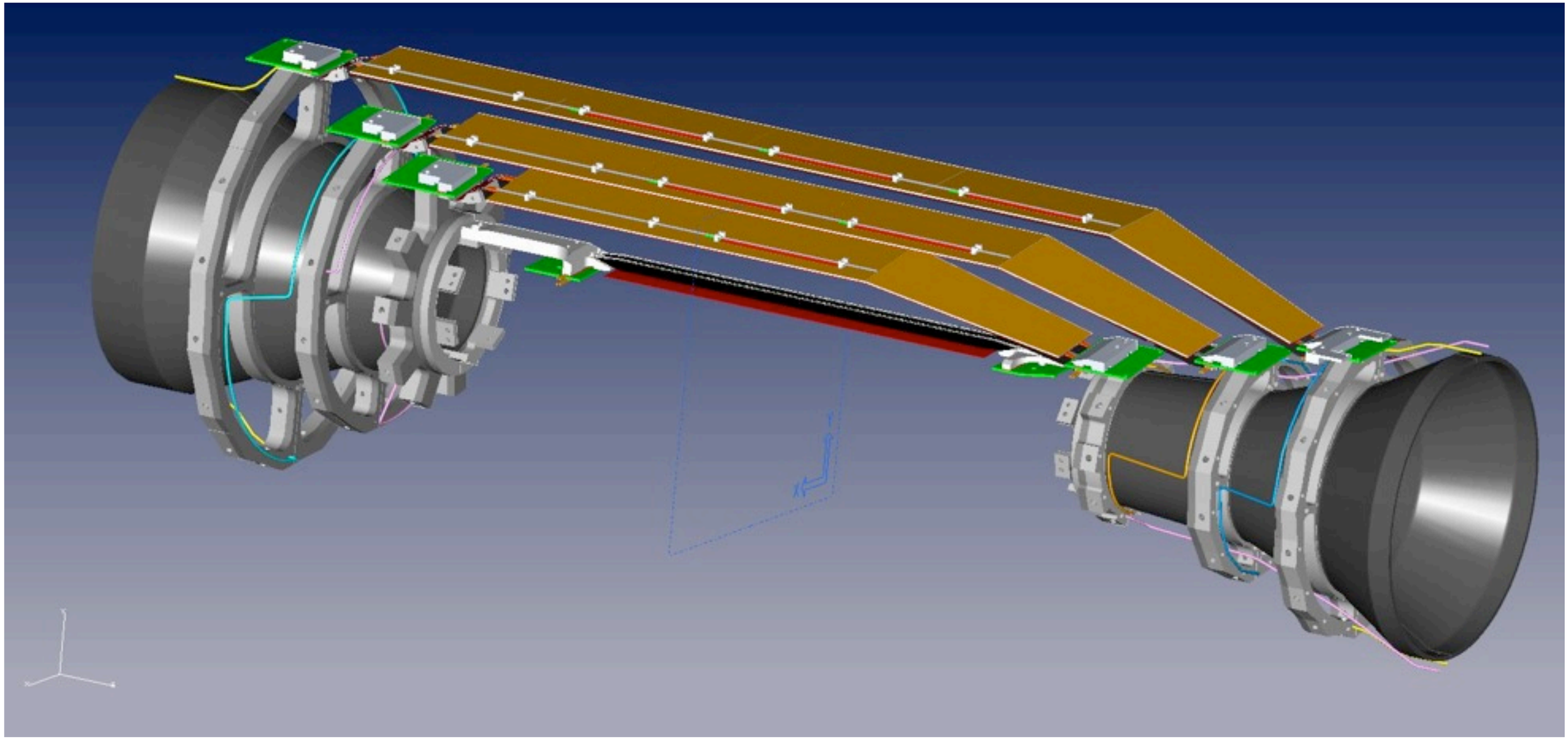

SVD Thermal Mockup Design

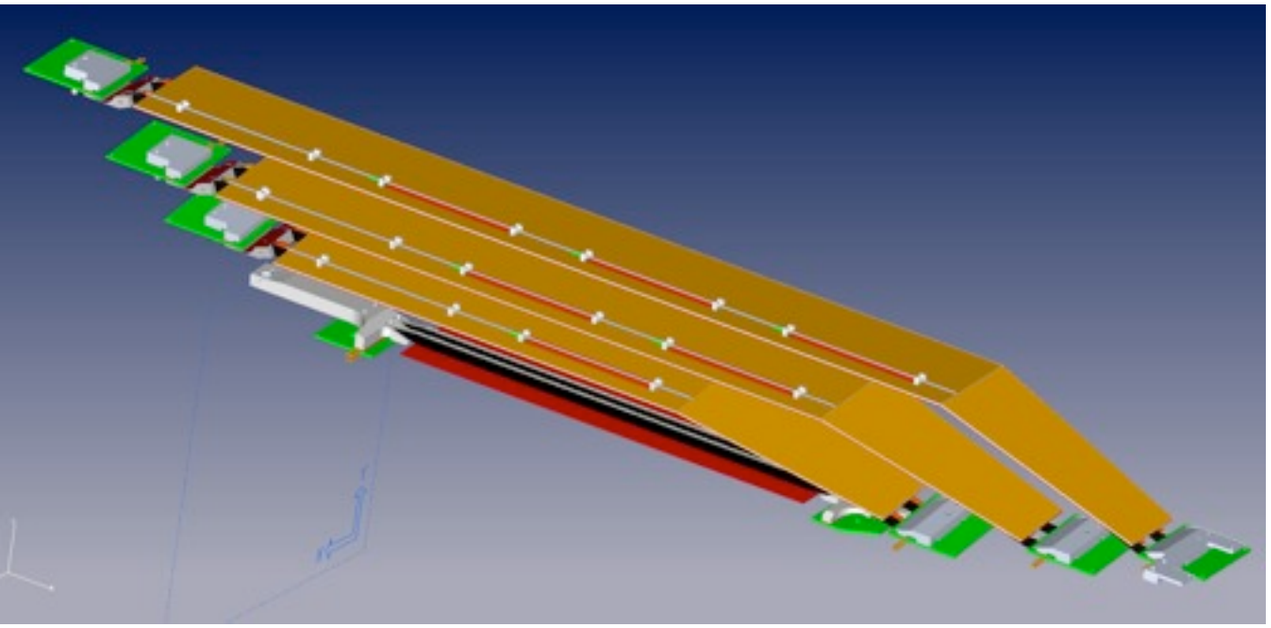

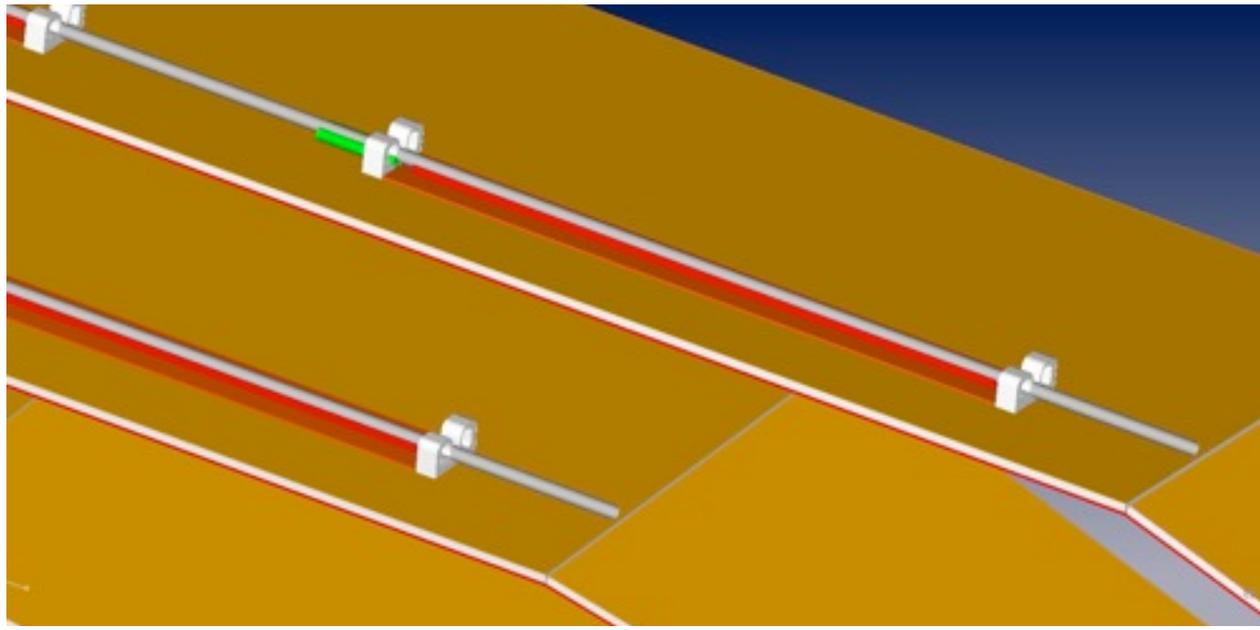

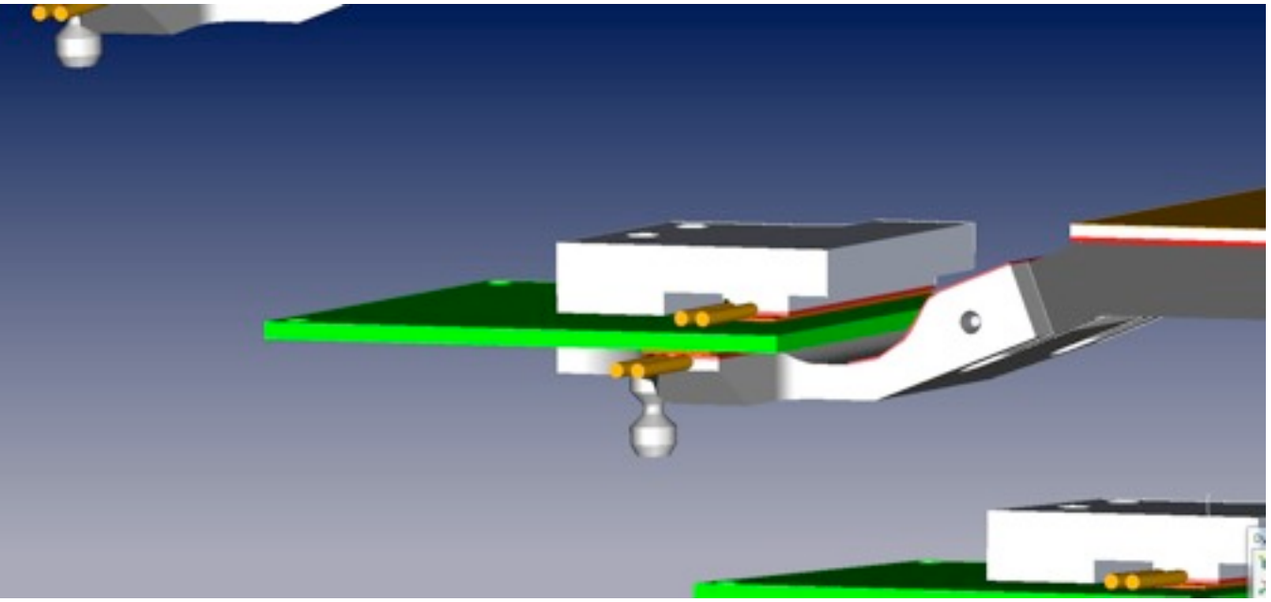

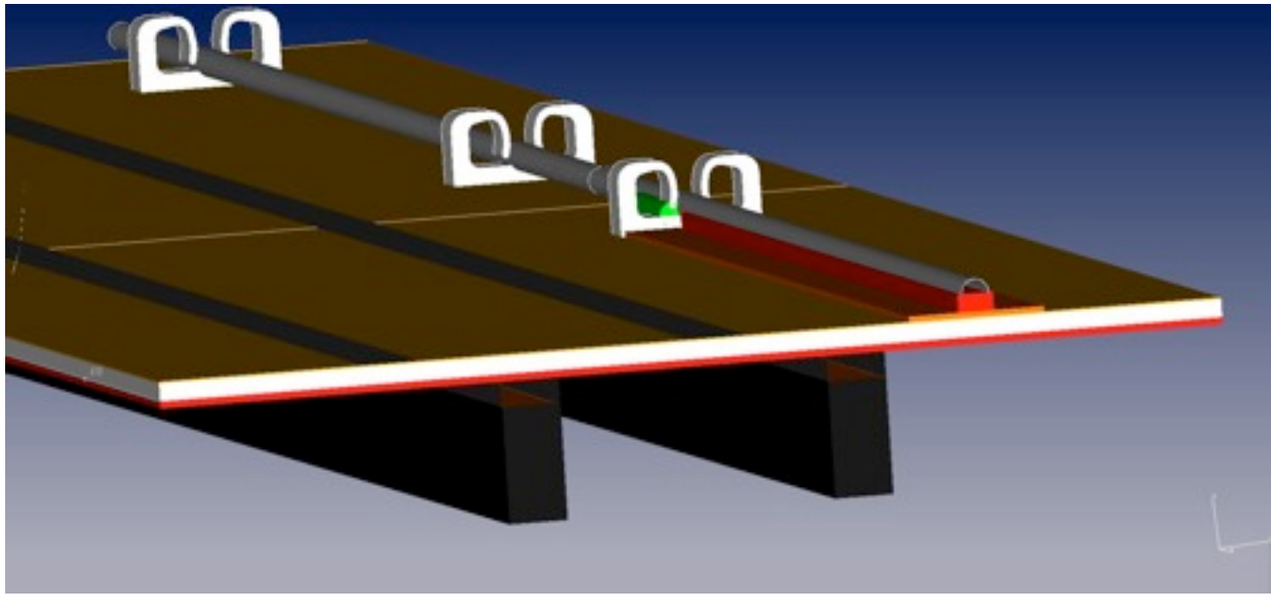

SVD Thermal Mockup Design

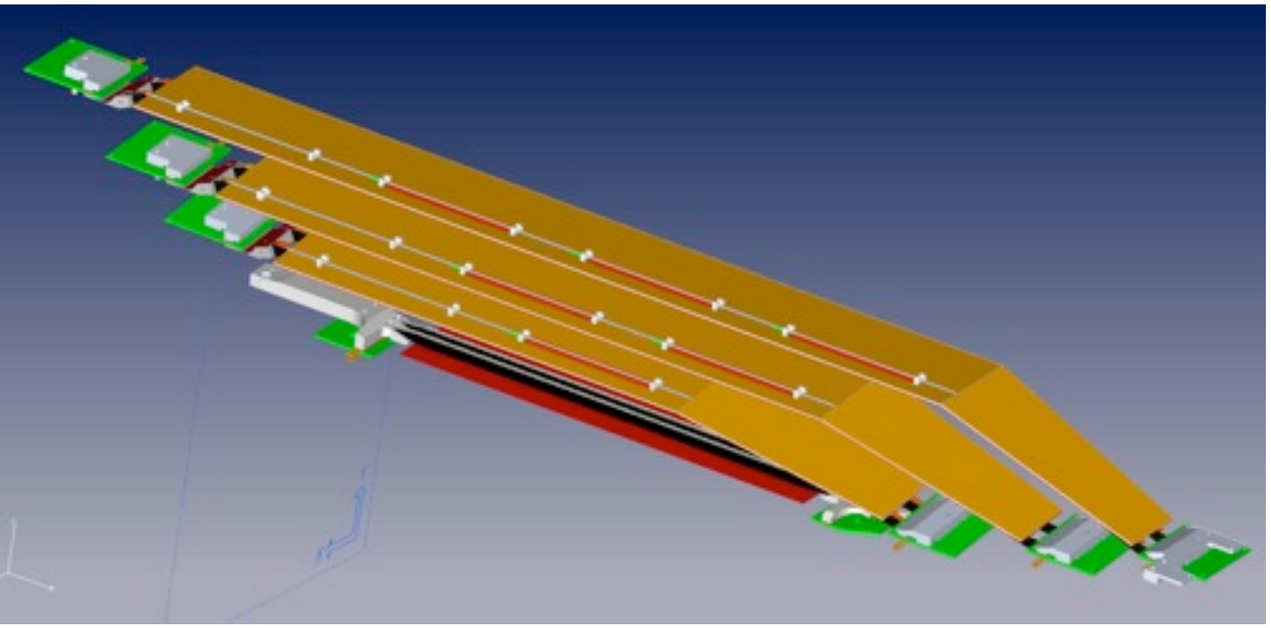

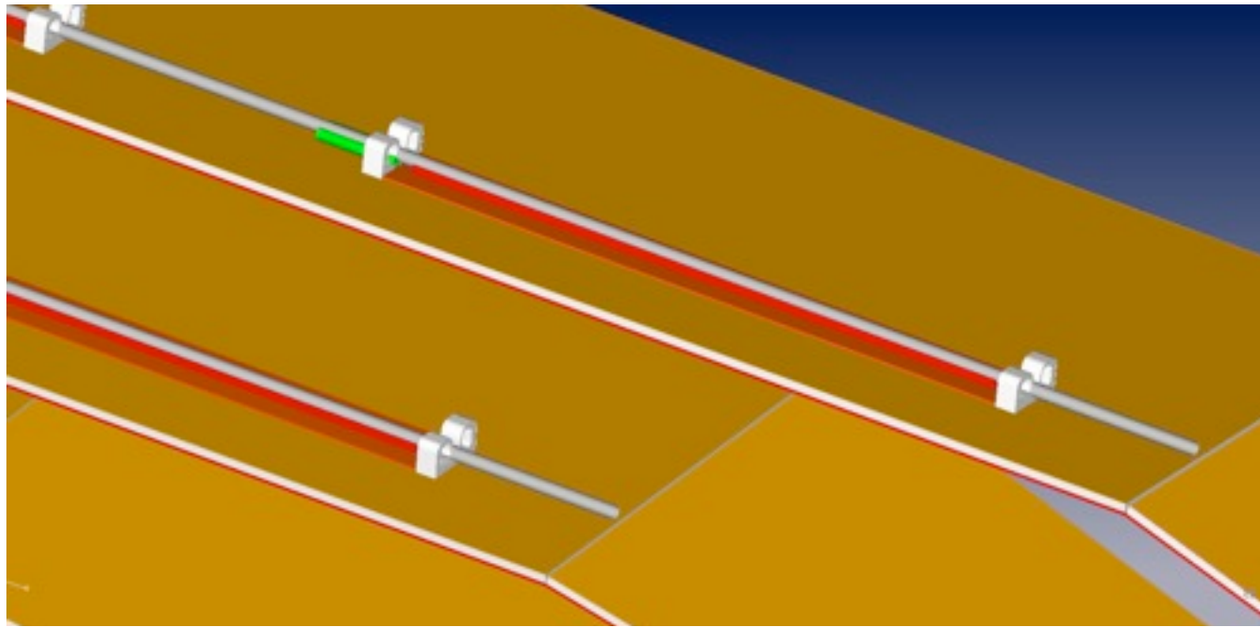

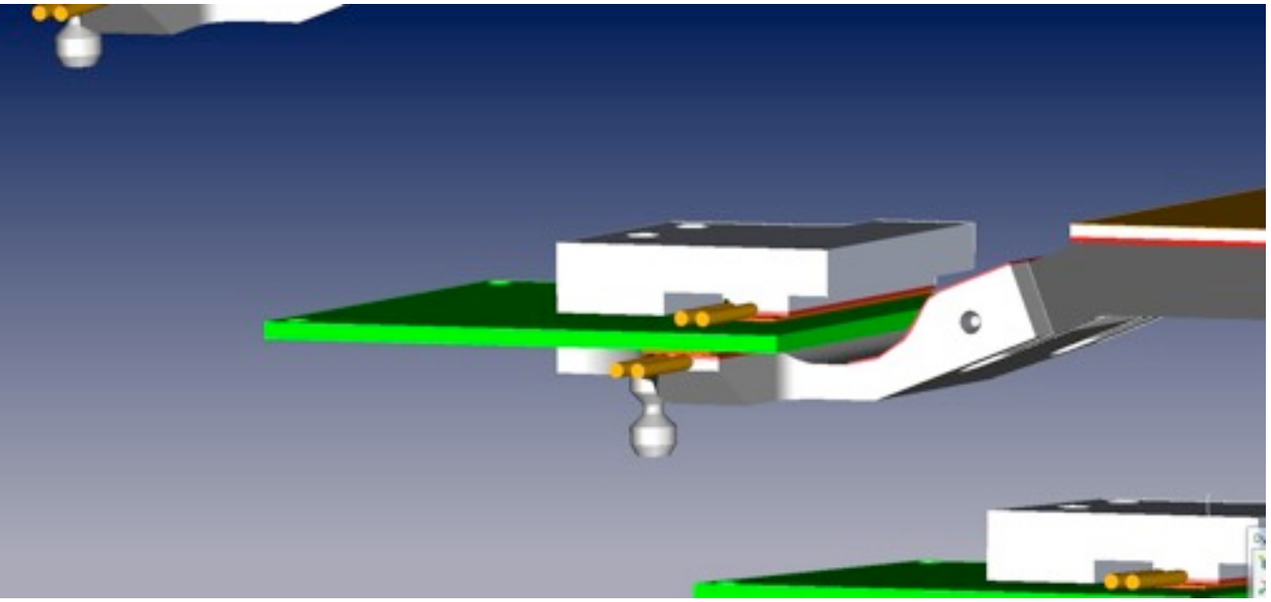

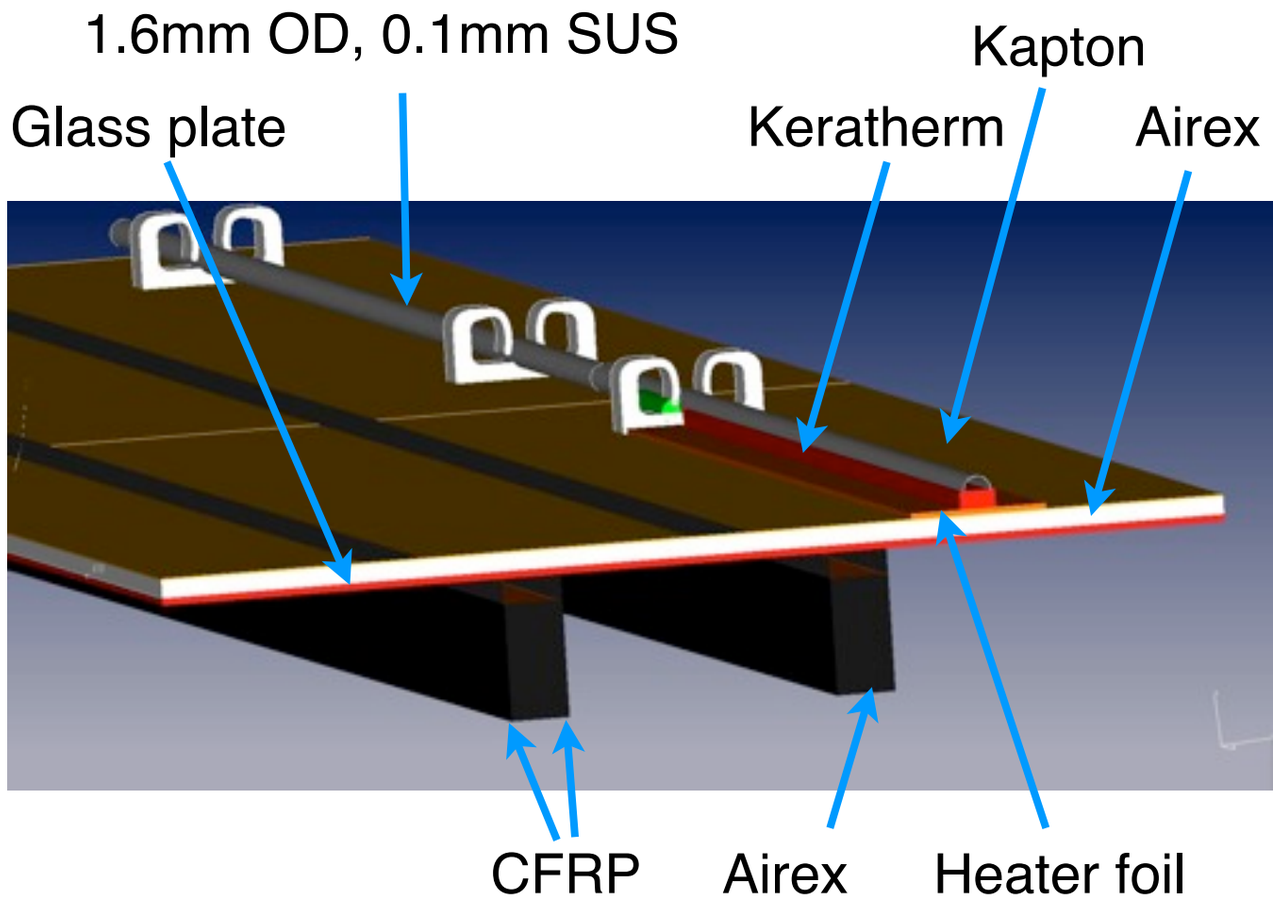

Status of SVD Dummy Sensors

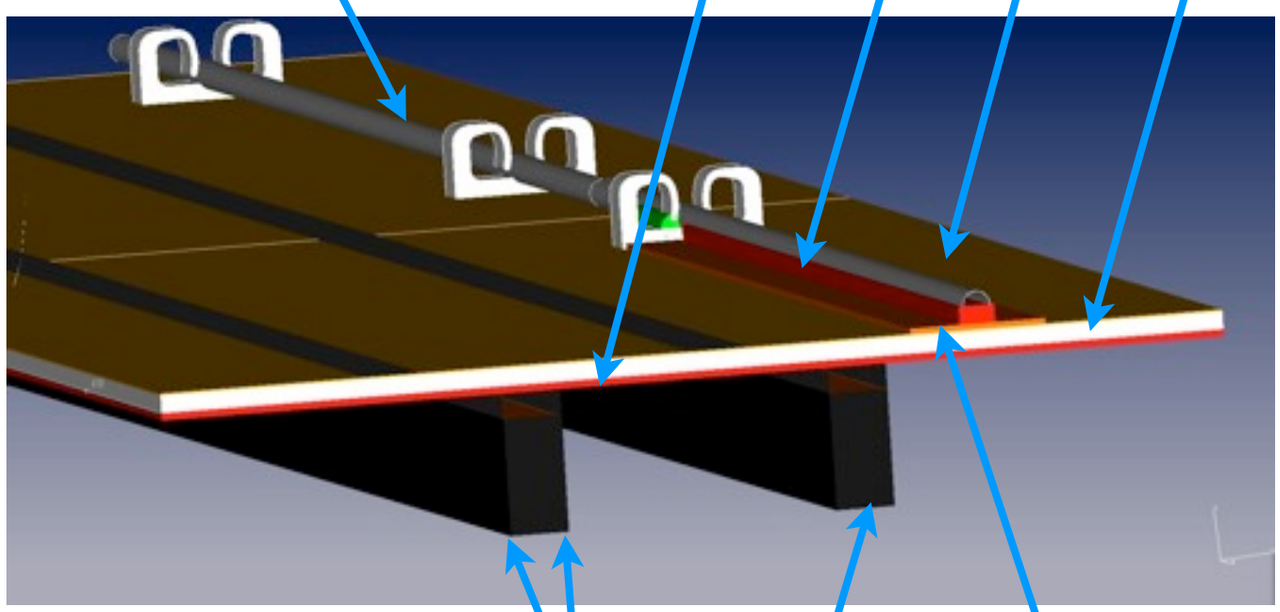

- All dummy sensors have been assembled
- Next steps in coming weeks before B2GM
  - glue heater foils with integrated PT100 sensors and origami pipe clips (from HEPHY) on kapton foil
  - prepare origami cooling pipe for L6 and perform pressure test

Status of SVD Dummy Sensors

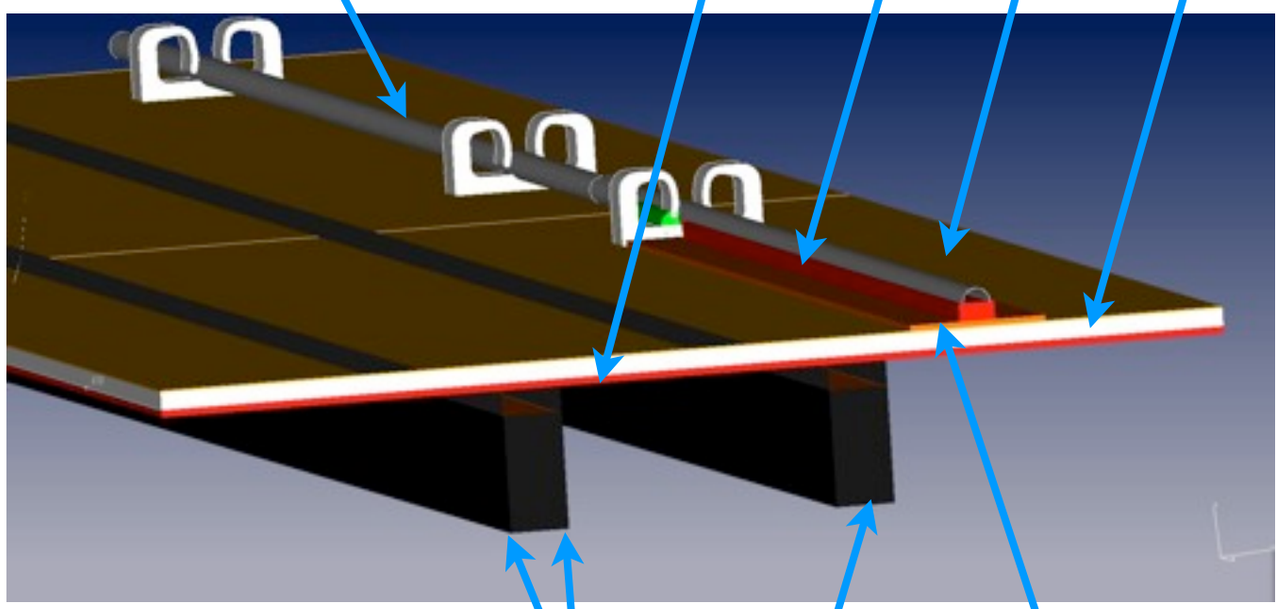

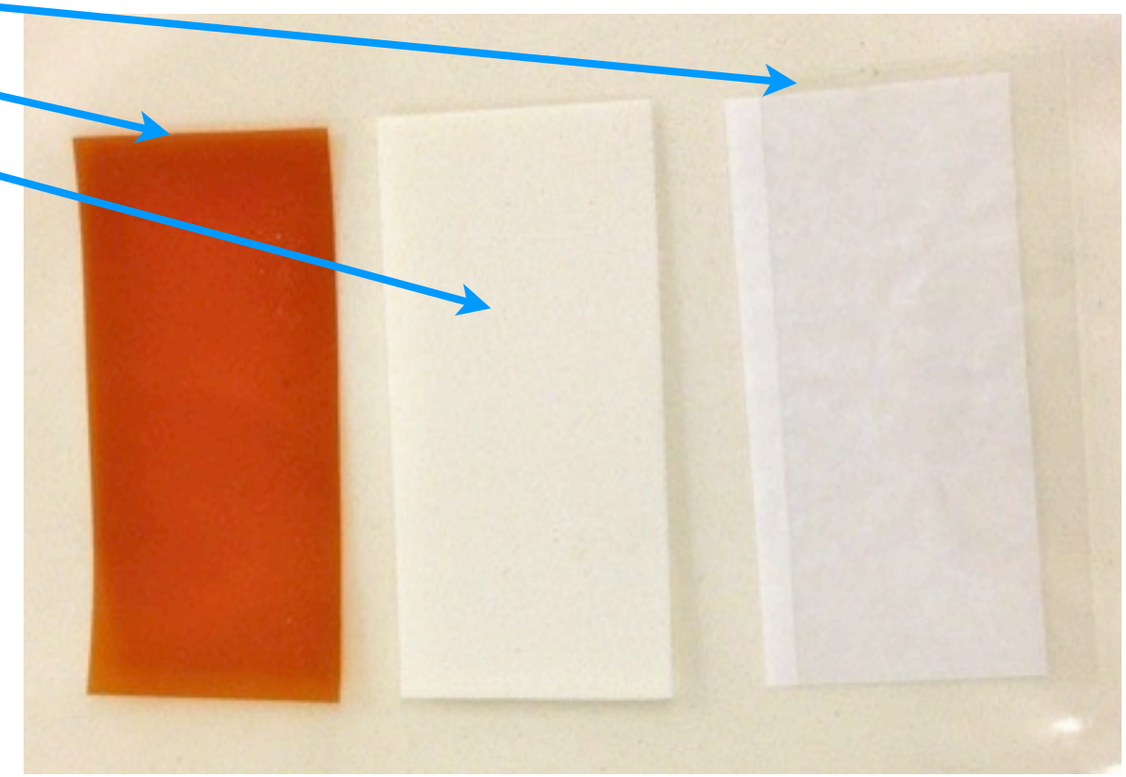

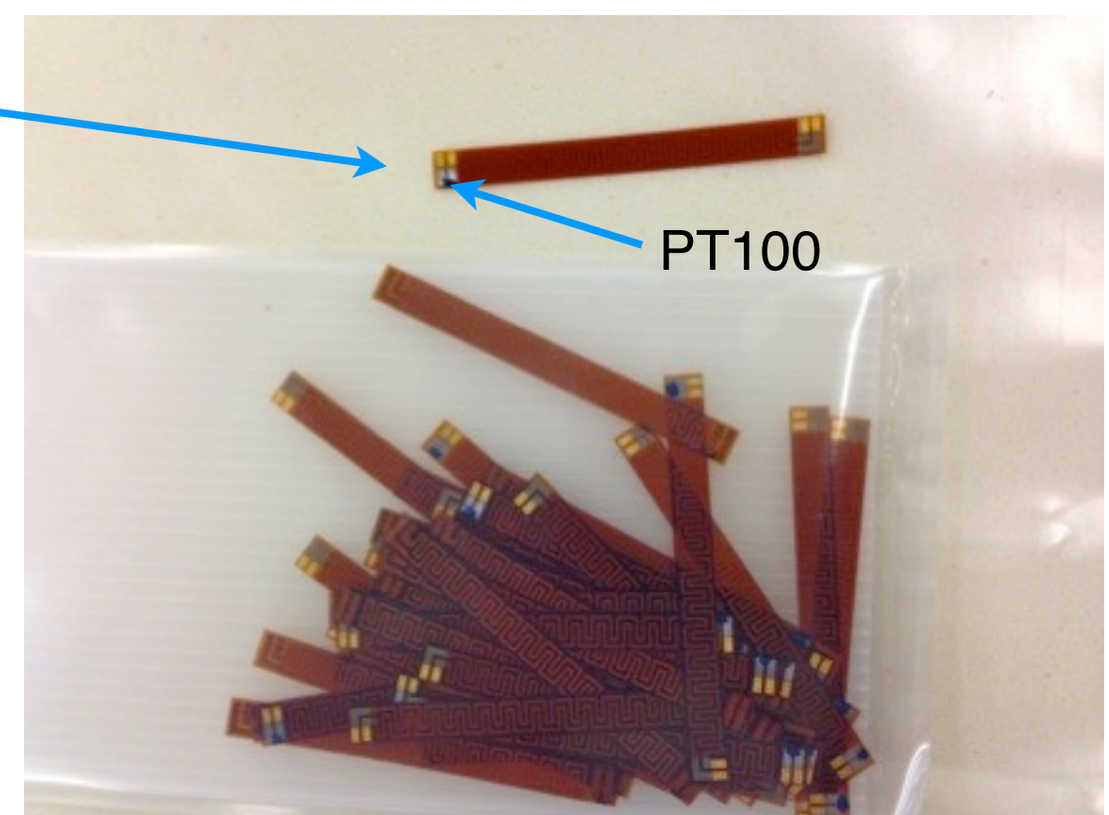

- All dummy sensors have been assembled
- Next steps in coming weeks before B2GM
  - glue heater foils with integrated PT100 sensors and origami pipe clips (from HEPHY) on kapton foil
  - prepare origami cooling pipe for L6 and perform pressure test

SVD Origami Cooling and End Mounts

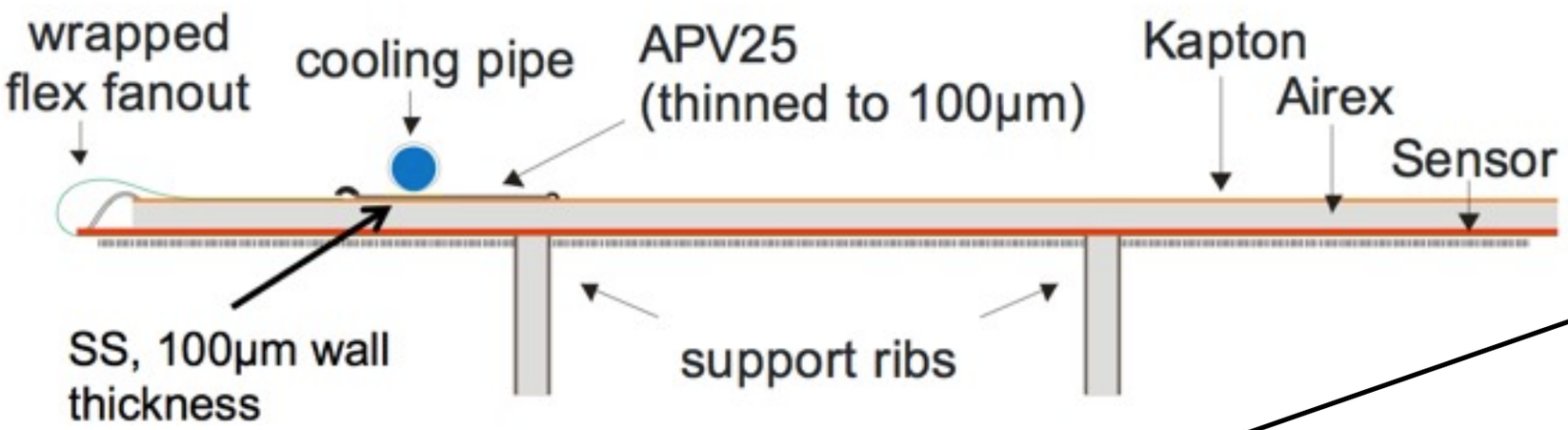

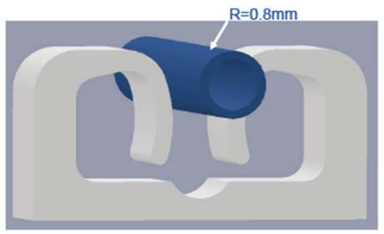

- Origami cooling pipe clips and hybrid PCBs received from HEPHY last week

- End mounts are being produced in Japan
  - KEK will send 4 sets of L3 mount bridges to DESY next week
    => assembly of L3 can start at DESY in June

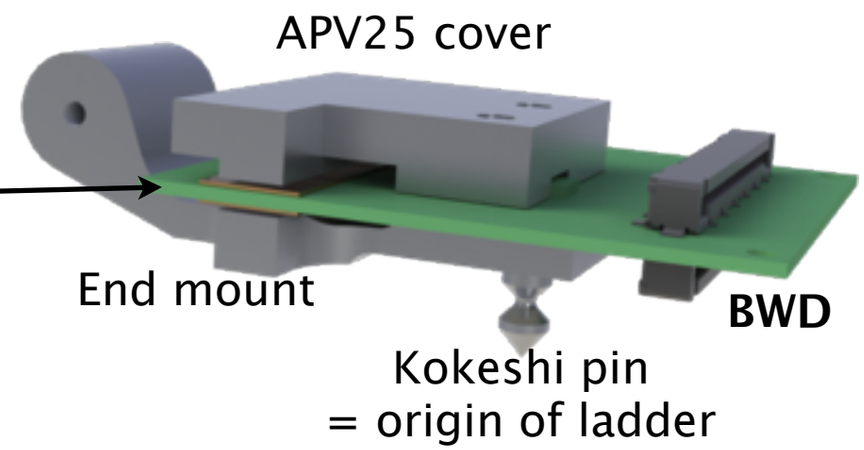

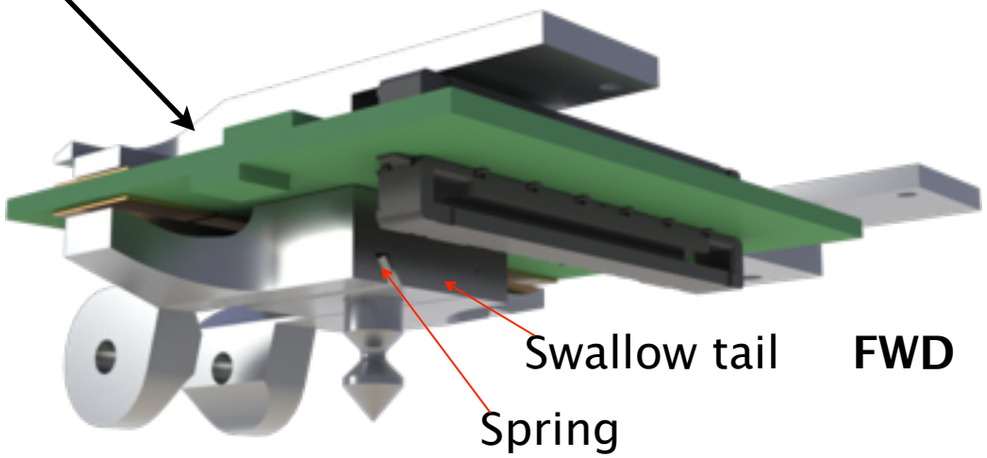

For details see SVD talk by M. Friedl

CFRP-Rib Production at DESY

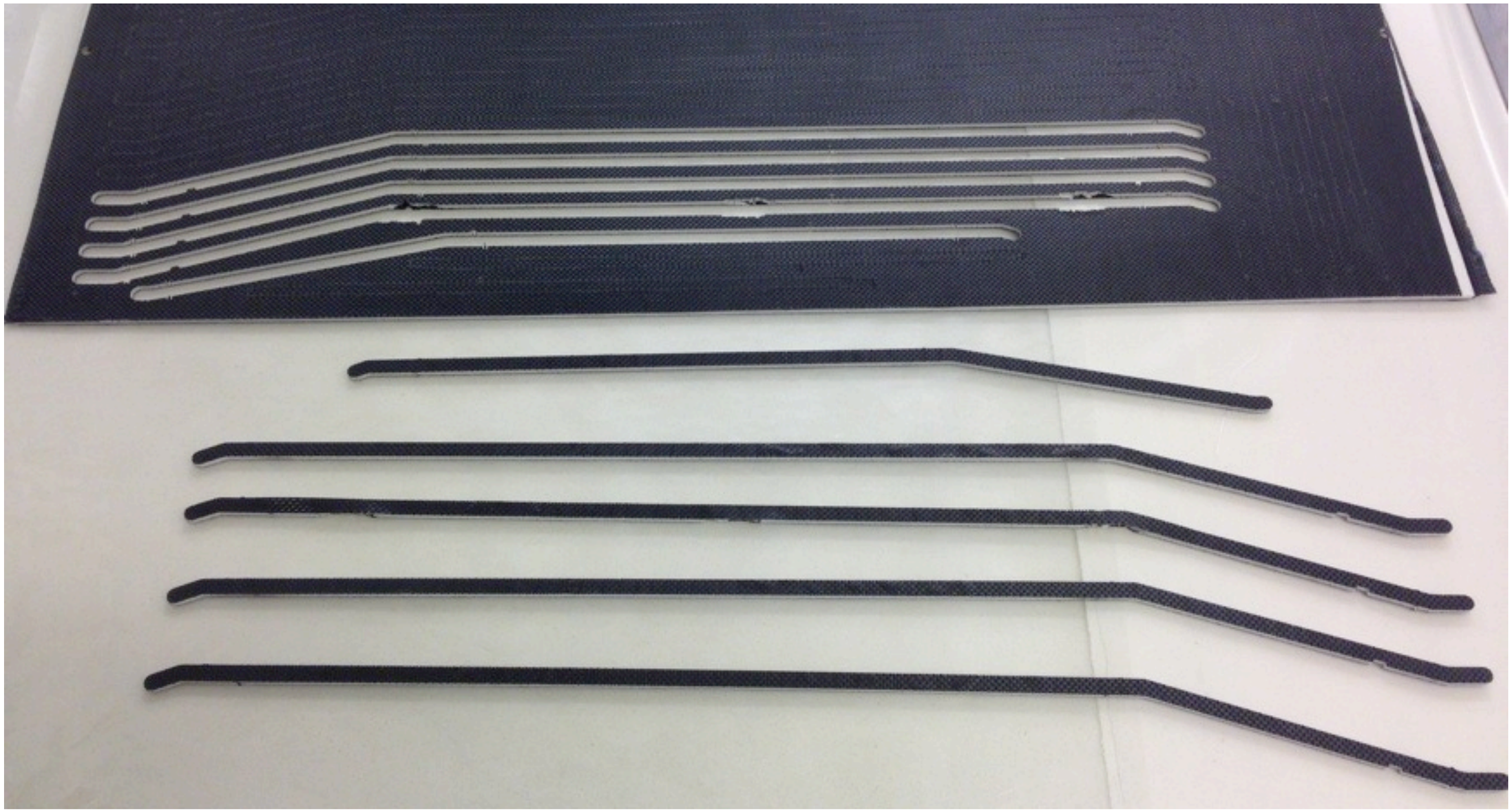

- First prototypes of CFRP-Airex panels for support ribs produced at DESY
- Water jet cutting procedure established
- Next steps
  - optimize panel production parameters and adopt new rib design (truss structure)

Schedule for Thermal Mockup as of February BPAC

		2014										
Task	Who	Feb	Mar	Apr	May	Jun	Jul	Aug	Sep	Oct	Nov	Dec
Maintenance/replacement MARCO CO_2 pumps	DESY											
Study transfer lines & dry volume	DESY											
Final SCB production	MPI											
Dummy ladder / kapton flex production	HLL/MPI											
PXD thermal mock-up assembly	DESY											
Integrate environmental sensors	CSIC-US											
PXD thermal studies	DESY											
SVD mock-up design	DESY											
SVD end ring production	DESY											
SVD end mount production	KEK											
CFRP support cone / outer cover production	KEK											
VXD end flange production	DESY											
Origami cooling pipe production	DESY											
Cooling pipe fixation clips	HEPHY											
SVD mock-up construction	DESY											
Environmental sensor integration	DESY											
SVD & VXD thermal studies	DESY											

Schedule for Thermal Mockup as of February BPAC

		2014										
Task	Who	Feb	Mar	Apr	May	Jun	Jul	Aug	Sep	Oct	Nov	Dec
Maintenance/replacement MARCO CO_2 pumps	DESY											
Study transfer lines & dry volume	DESY											
Final SCB production	MPI											
Dummy ladder / kapton flex production	HLL/MPI											
PXD thermal mock-up assembly	DESY											
Integrate environmental sensors	CSIC-US											
PXD thermal studies	DESY											
SVD mock-up design	DESY											
SVD end ring production	DESY											
SVD end mount production	KEK											
CFRP support cone / outer cover production	KEK											
VXD end flange production	DESY											
Origami cooling pipe production	DESY											
Cooling pipe fixation clips	HEPHY											
SVD mock-up construction	DESY											
Environmental sensor integration	DESY											
SVD & VXD thermal studies	DESY											

Longterm Operation of MARCO

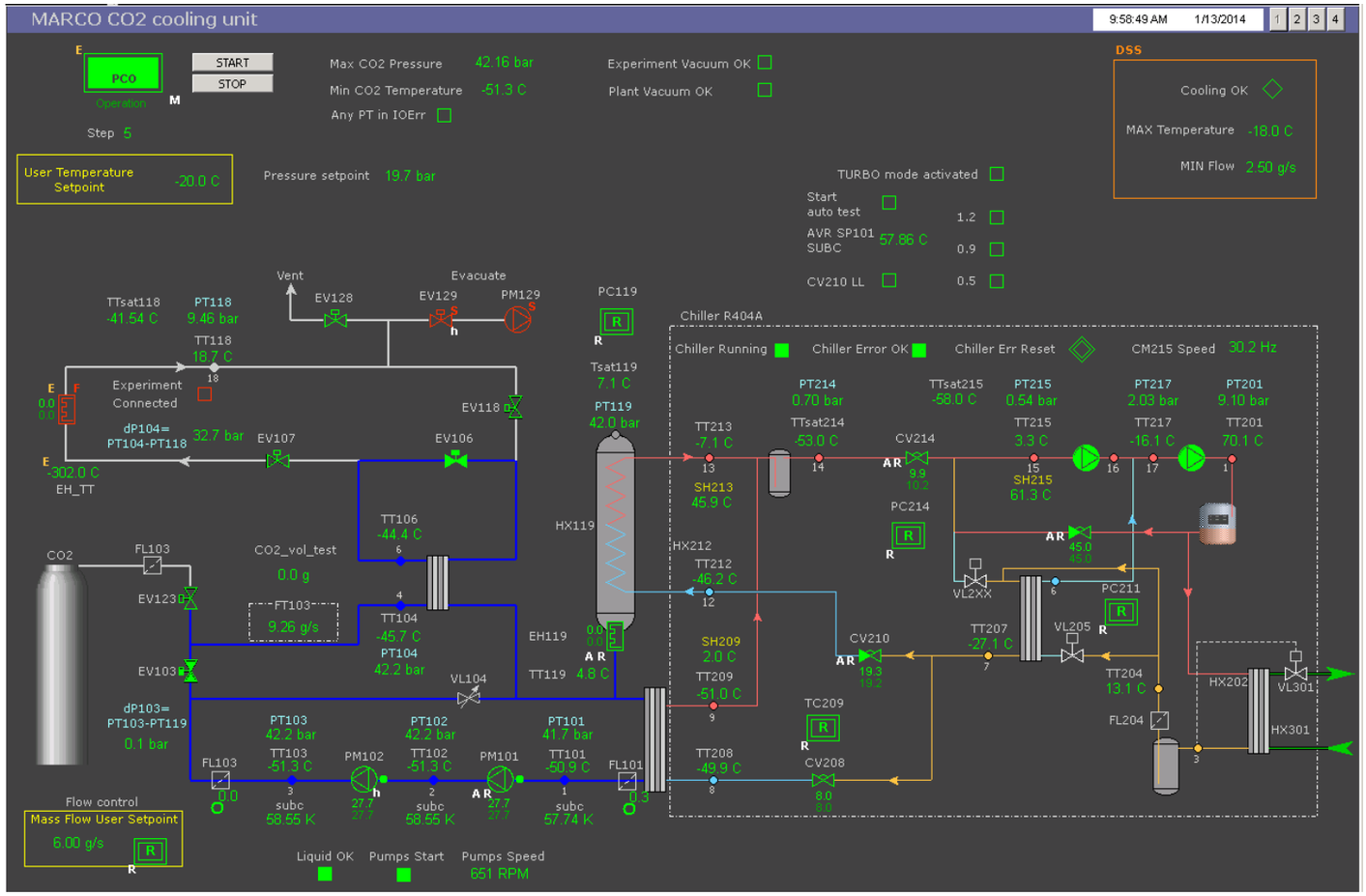

- Weak point of MARCO is reliability of the CO_2 pumps
  - abrasive wear of gears cause clogging of micro filters
  - systems switches off if pressure drop across filter reaches threshold
  - => have to replace filter and/or pump head: time consuming and costly
- During DESY beam test could barely keep MARCO operationally
- Cooling capacity of MARCO insufficient for full thermal mock-up
- Replacement of pumps under discussion with experts at CERN
  - IBBelle will use different kind of pump (triple head LEWA)

Longterm Operation of MARCO

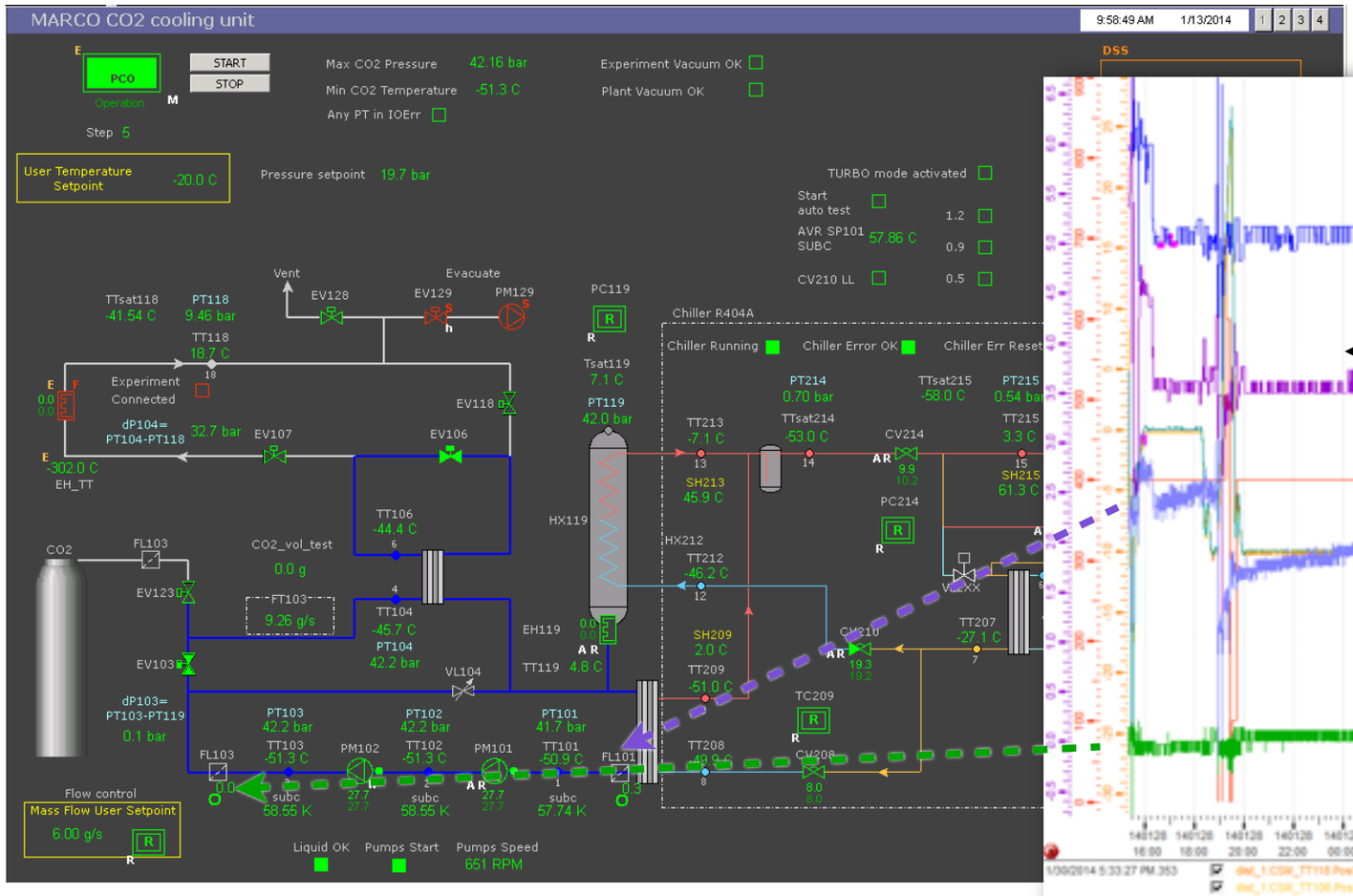

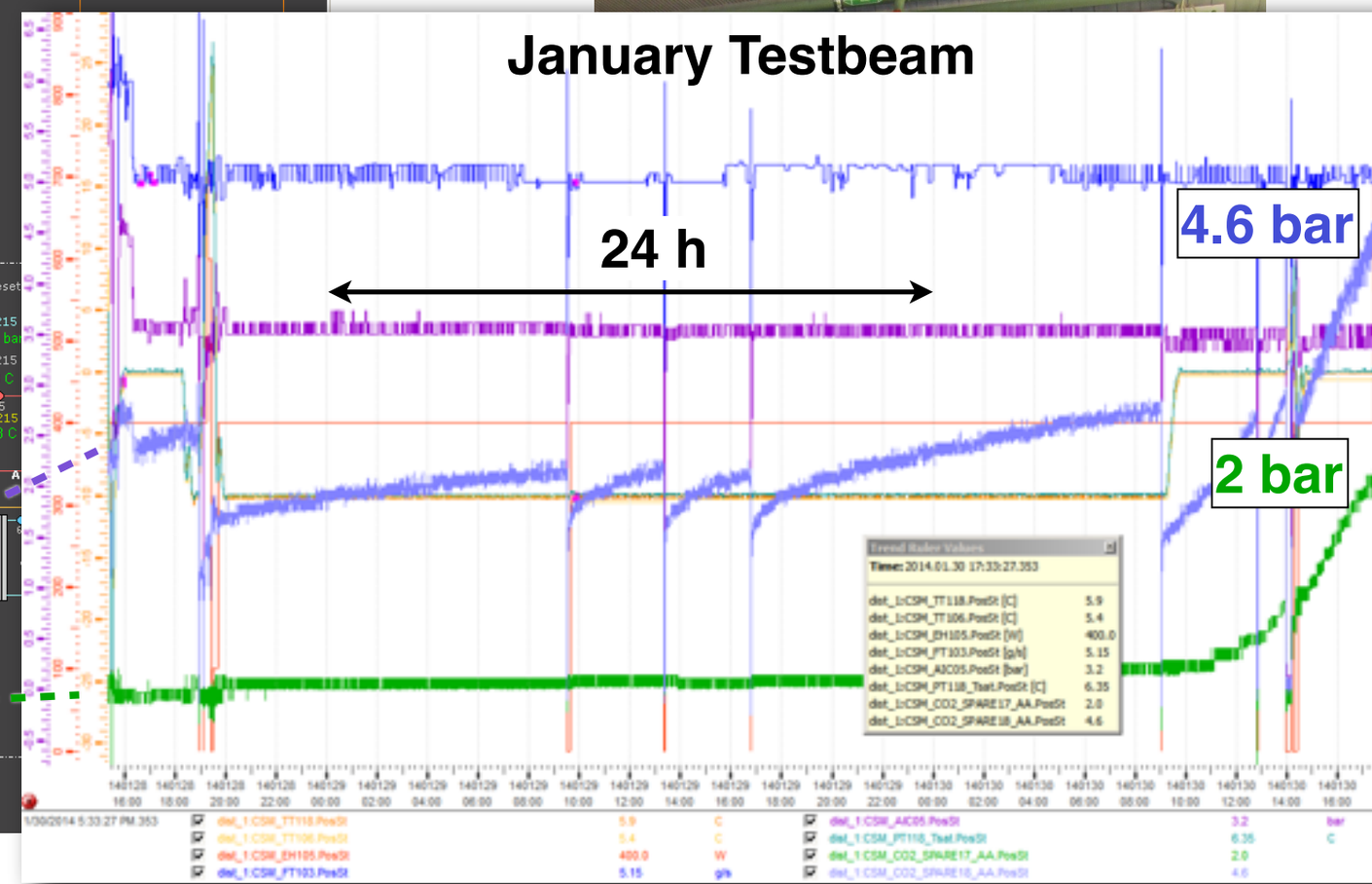

- Weak point of MARCO is reliability of the CO_2 pumps
  - abrasive wear of gears cause clogging of micro filters
  - systems switches off if pressure drop across filter reaches threshold
  - => have to replace filter and/or pump head: time consuming and costly
- During DESY beam test could barely keep MARCO operationally
- Cooling capacity of MARCO insufficient for full thermal mock-up
- Replacement of pumps under discussion with experts at CERN
  - IBBelle will use different kind of pump (triple head LEWA)

MPI/DESY Visit at ATLAS-IBL in April

ATLAS-IBL CO_2 Cooling Plants @ USA15

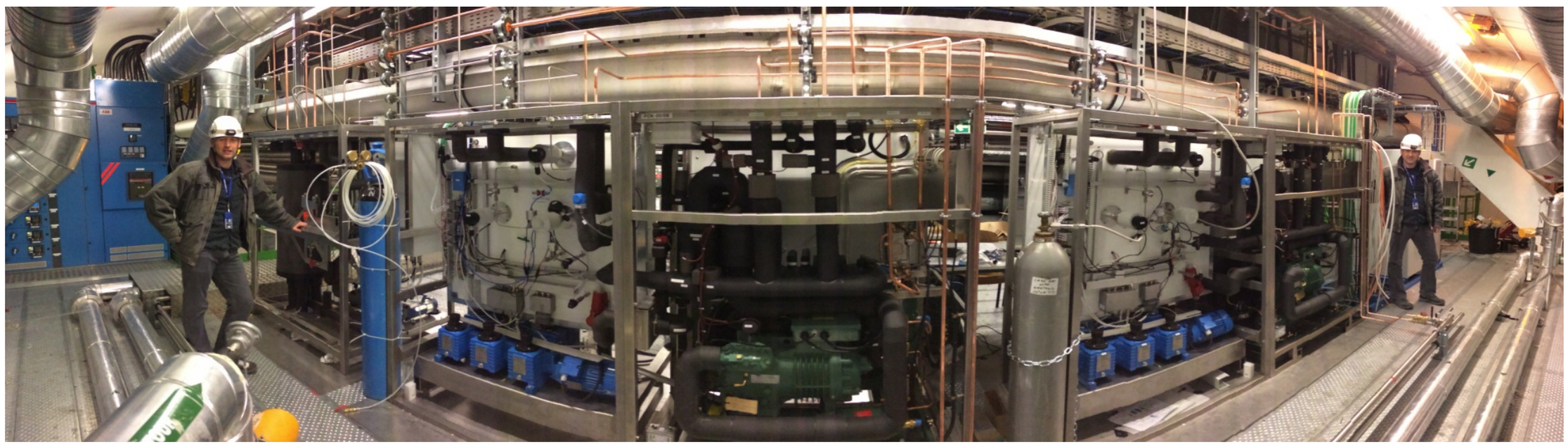

- All cooling units operational and running relatively smoothly
- Most fine-tuning of control loops completed
- Chiller mechanical modification completed
- Commissioning has started

ATLAS-IBL Cooling System Status

Commissioning plans and outlook

Conclusions:

The IBL cooling is starting to work.

First observations:

- -40'C operation is more critical than expected
- -35'C operation is okay up to 3kW
- Pressure drops are more significant than expected
- More heat load in liquid pump, meaning a higher needed minimum sub cooling.
  - Direct effect on the lowest possible temperature.
- All above adds up and brings target operational performance to become critical for higher heat loads

Plans:

- swaps procedures test,
- bake-out procedure test,
- chiller heat balance test,
- transfer line capacity measurements,
- pump sub cooling test (started),
- system cycling,
- accumulator performance test,

Commissioning is a bit delayed because of involvement in the detector connection tubing

This is the result of the work of 15-20 experts !

Lukasz Zwalinski ID Week May 2014 19th May 2014

Summary

- Preparation of SVD mockup progressing well at DESY
  - support from HEPHY (clips, hybrid PCBs) and
  - KEK (CFRP support structures, end mounts) are highly appreciated

- MARCO needs to be upgraded to cope with heat load of full VXD thermal mockup
  - decision on final pump has to be taken soon

- IBBelle
  - significant effort required to collect neccessary information before IBBelle can be build
  - important lessons from ongoing ATLAS-IBL installation and commissioning

VXD Heat Dissipation and CO_2 Cooling Circuits

CO_2 Circuit	Detector	Half	Layer	Type	Side	Power [W]
1	PXD	up	1&2	endring	bwd	90
2			1&2	endring	fwd	90
3		down	1&2	endring	bwd	90
4			1&2	endring	fwd	90
					sum PXD	360
5	SVD	left	3-6	endring	bwd	93
6		right	3-6	endring	bwd	93
7		left	3-6	endring	fwd	93
8		right	3-6	endring	fwd	93
9		left	4&5	origami	bwd	68
10		right	4&5	origami	bwd	68
11		left	6	origami	bwd	96
12		right	6	origami	bwd	96
					sum SVD	700
					sum VXD	1060

plus 12 circuits for
dry air supply

plus parasitic heat load
from the environment

VXD Cooling Pipe System

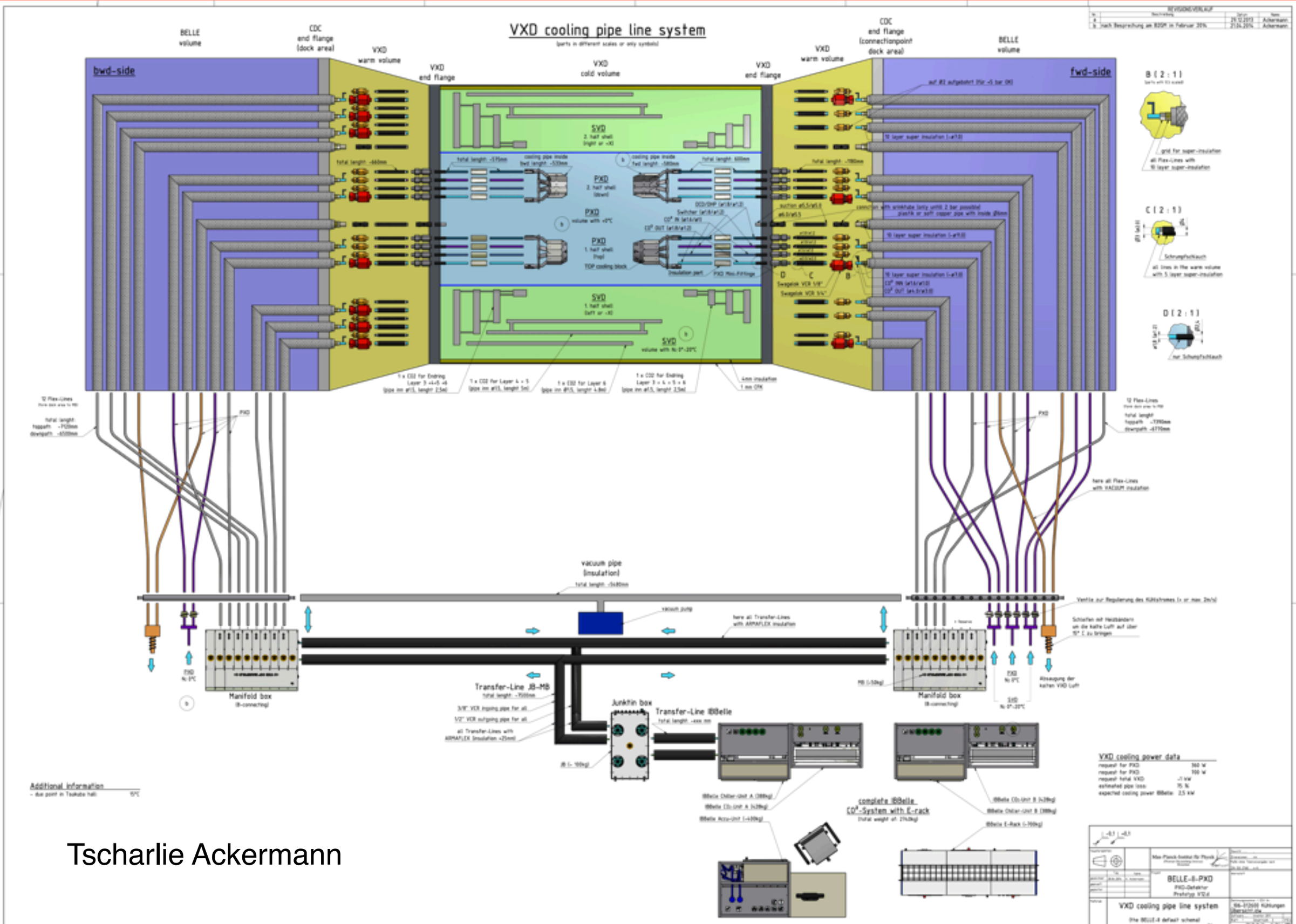

Tscharlie Ackermann