Infiniband Data Cables

Felix Müller

Max-Planck-Institute for Physics

Drawing by
K. Ackermann

May 25 - 28, 2014
Kloster Seeon
Bavaria, Germany

Requirements

- Halogen free
- Sulphur free
- Dielectric/Isolation (IEC 60332-1 & 60332-2)
- Low smoke density (IEC ISO 5659-2 or ASTM E662 and IEC 61024 part 1 and part2)
- Radiation hard (IEC 60544-2 and IEC 60544-4 and ISO R527)
- UV resistant (IEC 60068-2-5)

CERN	INSTRUCTION DE SÉCURITÉ SAFETY INSTRUCTION Mandatory as defined in SAPOCO/42	IS23 Rev. 3

Issued by: SC/GS

Date of revision: February 2005
Original: English

Criteria and Standard Test Methods for the Selection of Electric Cables and Wires with Respect to Fire Safety and Radiation Resistance

- AWG 24
- 8 pairs
- Impedance 100Ohm / tolerance
- Attenuation <0.9db/m @ 1GHz

- Minimum bending radius: 10mm
- Maximum outer diameter: 9.4mm
- Operation temperature: room temperature
- 2m (Data Patch Panel & Infiniband Connector)
- 13-17m Cables

Cable 1:
4x 1,6 Gbit
1x Clock 76MHz
1x TRG 76MHz

Cable 2:
max 5MHz
(JTAG)

Companies selling Infiniband Cables

Company	Status
3M	Waiting for reply
Amphenol	Waiting for reply
AP Products	Do no assemble cables
Finisar	Waiting for reply
Fujikura America Inc.	Waiting for reply
Gore	Waiting for reply
Hitachi Cable America	Waiting for reply
Hubersuhner	Waiting for reply
Leoni	Do not sell them anymore
Lorom	Standard Cables
LTK Cable	Still waiting
Meritec	Provide them
Molex	Waiting for reply
Samtec	EPLSP
Sumitomo Electric	Waiting for reply
TE Connectivity	Standard cables
Rosenberg OSI	Only optical fibres
Yamaichi	Waiting for reply

Data cables from PXD (DHP) to FPGA (DHH)

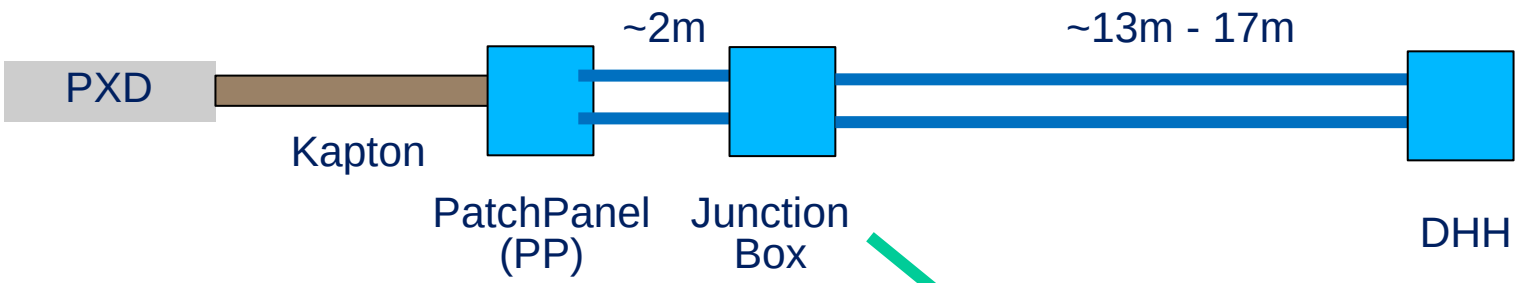

PXD-Kapton:

Signals are transferred via Bond-Wires

Kapton - PatchPanel:

Samtec Connector (SS4-20),

PatchPanel – Infiniband (1):

Soldering of Infiniband Cables directly on PCB

Infiniband (1) – Junction Box

Connector (CX4)

Junction Box – Infiniband(2):

CX4 Connectors

Infiniband(2) – DHH:

CX4 Connectors

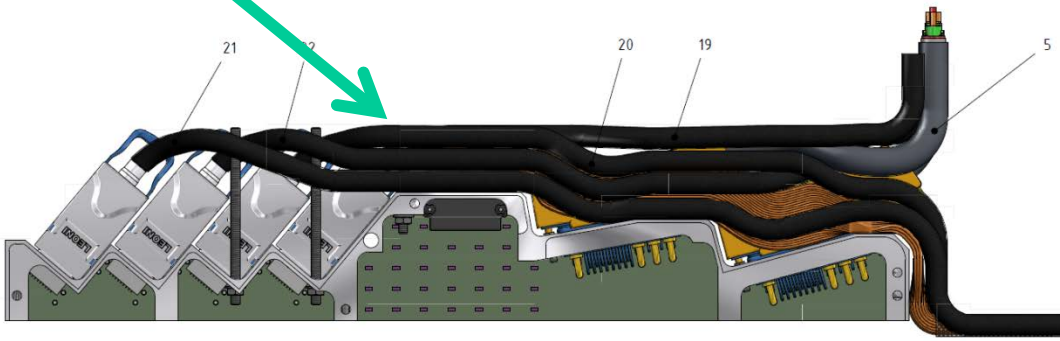

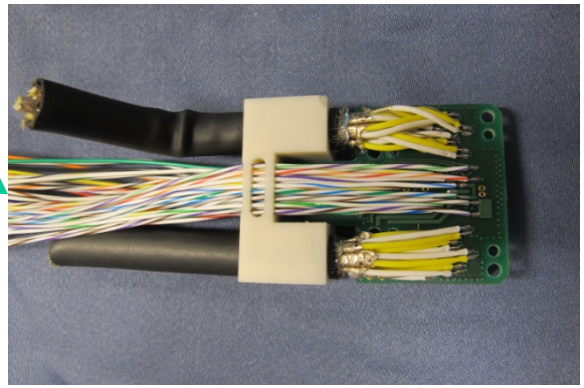

Data cables from PXD (DHP) to FPGA (DHH)

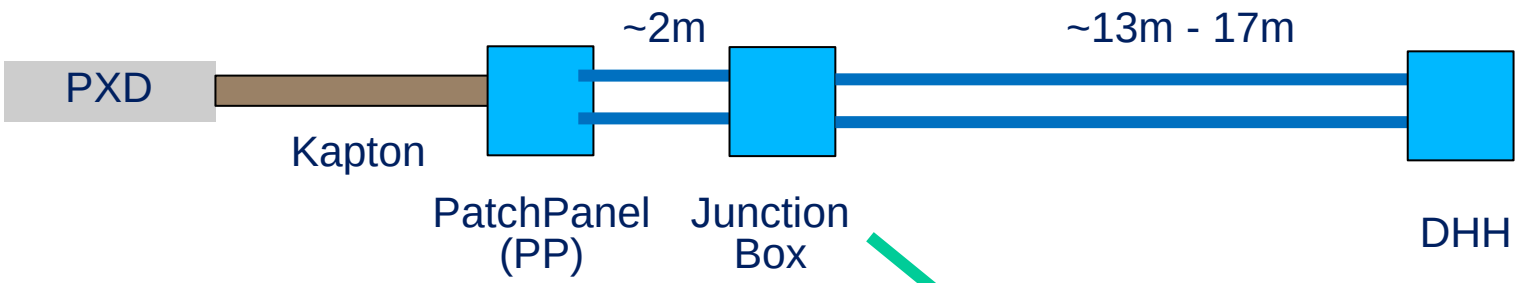

PXD-Kapton:

Signals are transferred via Bond-Wires

Kapton - PatchPanel:

Samtec Connector (SS4-20),

PatchPanel – Infiniband (1):

Soldering of Infiniband Cables directly on PCB

Infiniband (1) – Junction Box

Connector (CX4)

Junction Box – Infiniband(2):

CX4 Connectors

Infiniband(2) – DHH:

CX4 Connectors

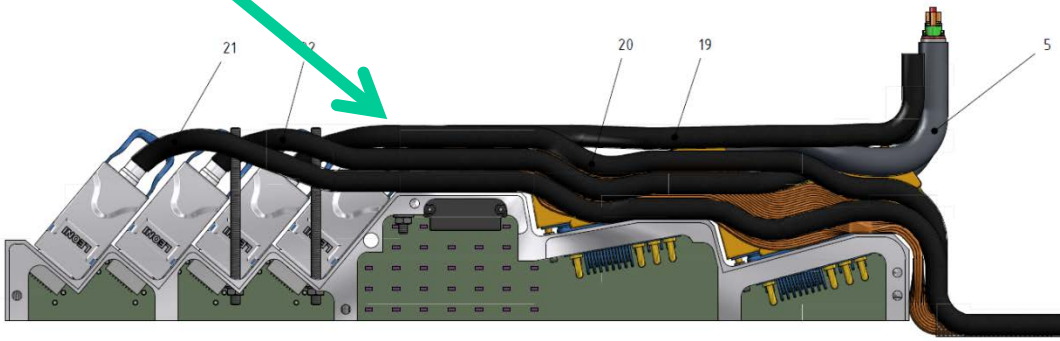

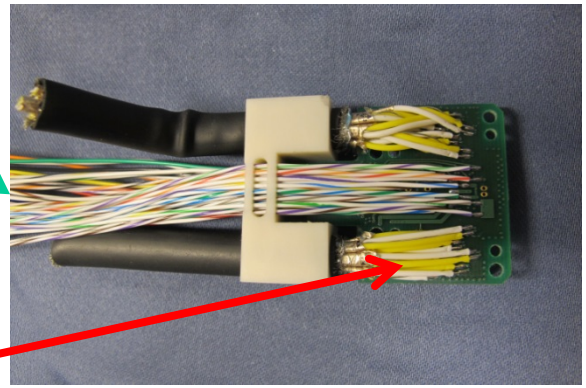

critical

Termination of Infiniband Cables

Source
http://www.magazines007.com/pdf/DC08_Dana_Bergey.pdf

Short Cables – Infiniband(1)

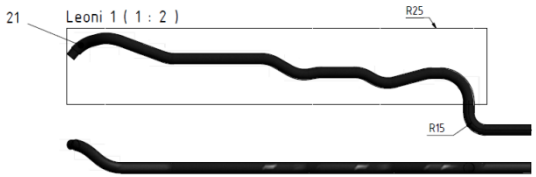

PatchPanel – Junction Box

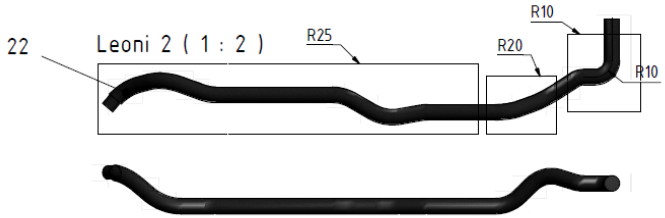

Minimum Bending Radius: 10mm

Bending Radius datasheet: ~80mm

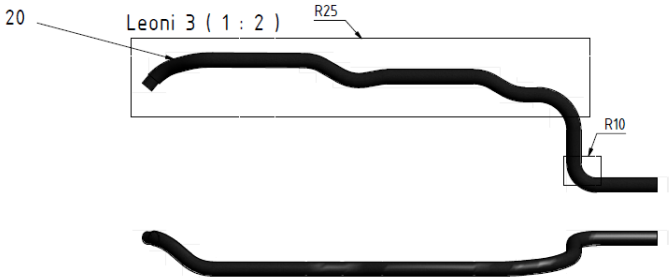

Test of bended cables

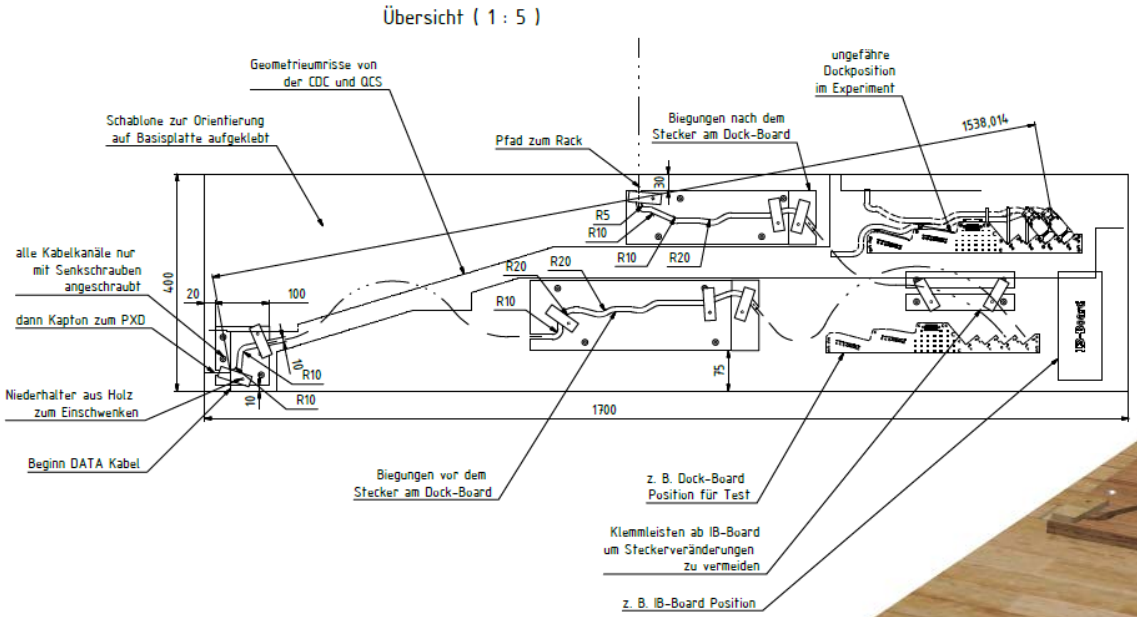

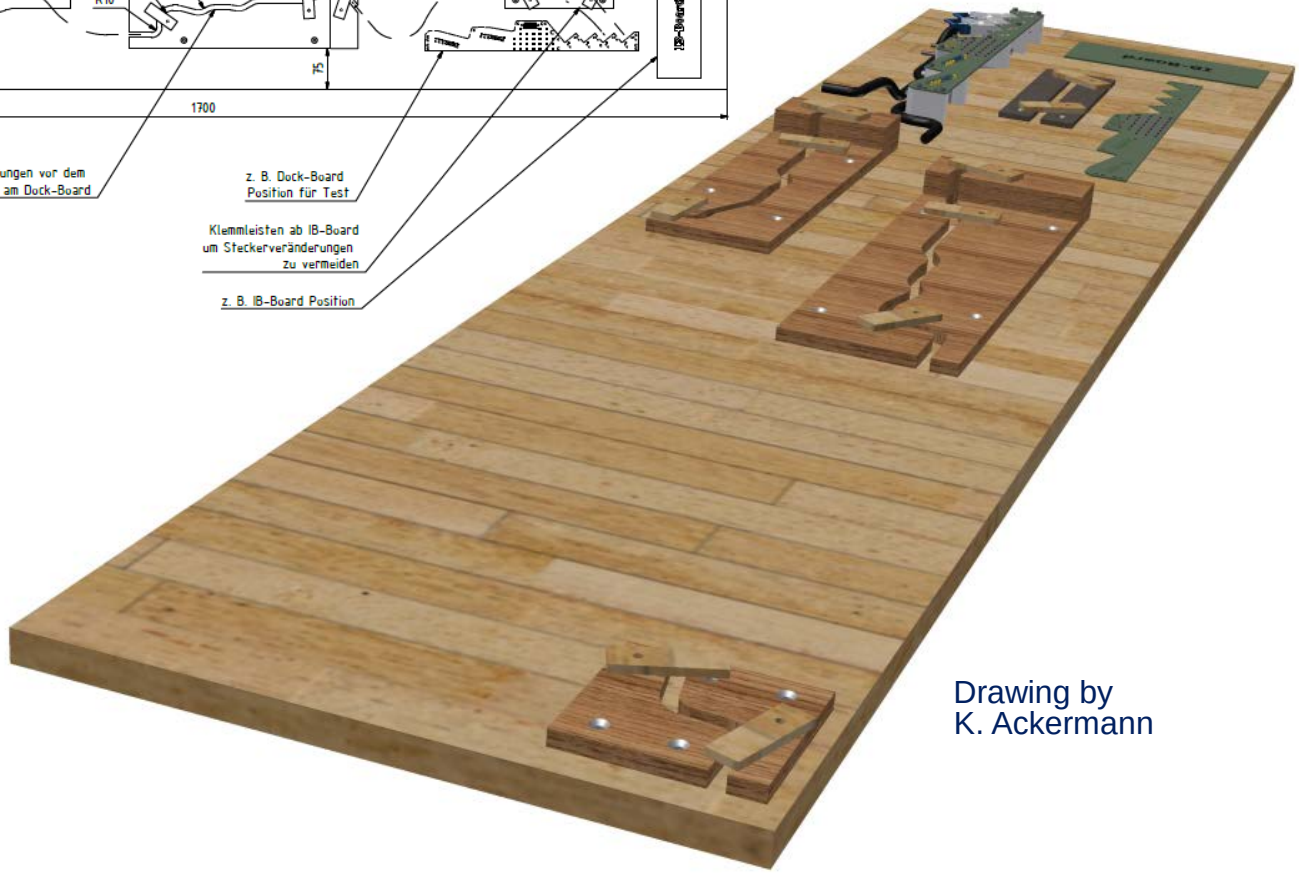

Put cables inside the cable routings

⇒ measure S-parameters

Drawing by K. Ackermann

Breakout Board for Infiniband

Infiniband to SMA

Impedance controlled (100Ω)

same lengths of traces

Work in progress

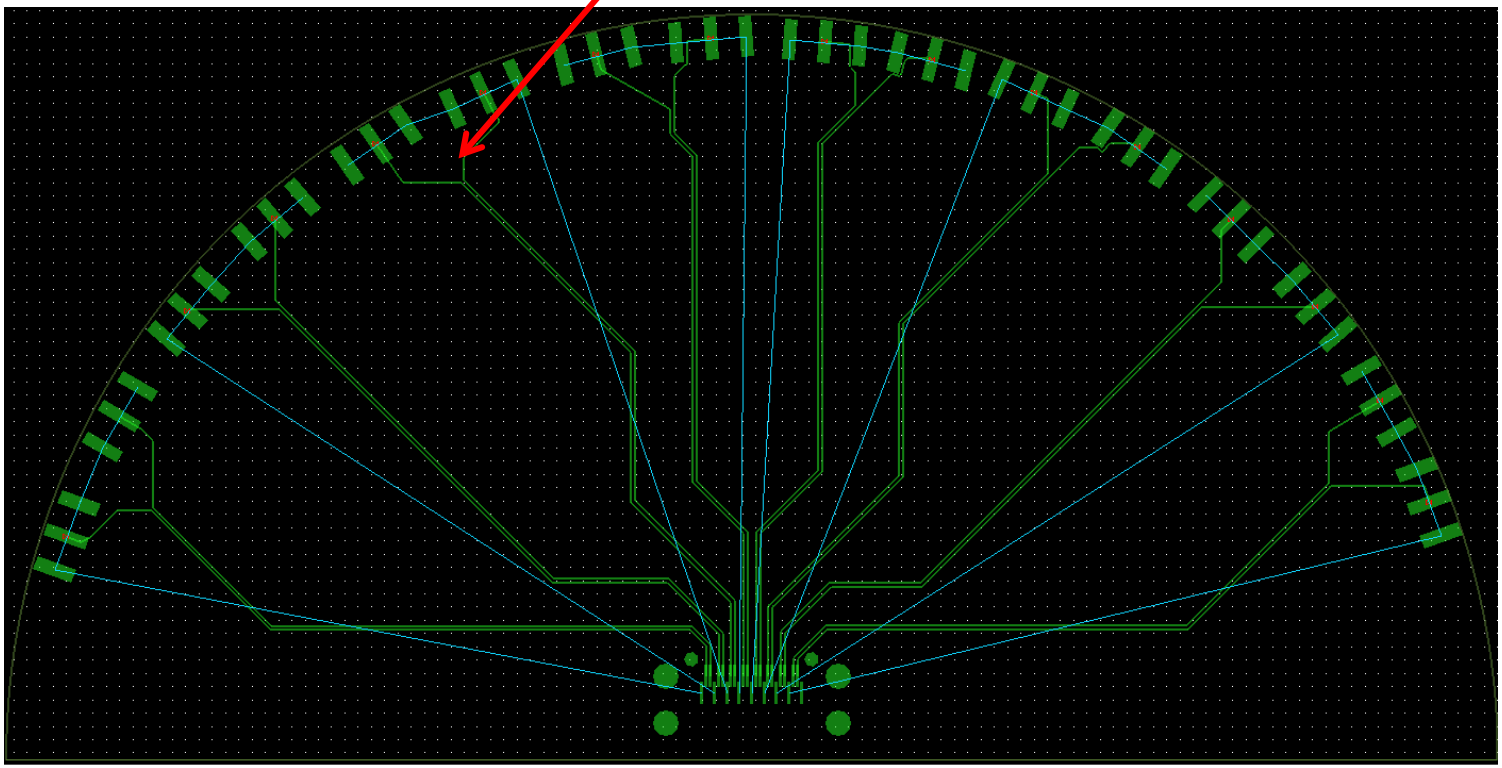

IBM System Cluster 1350 - Cabling Guidelines

To avoid damage to the InfiniBand cables, follow these guidelines:

- Route cables where they will not be snagged by other devices in the rack or raised floor
- Do not over tighten the cable straps or bend the cables to a radius smaller than 4 inches. (See figure below. Distance 'D' equals 4 inches).
- Do not put excess weight on the cable at the connection point and be sure that it is well supported
- Do not leave cables on the floor where they can be damaged by carts or foot traffic.
- Provide appropriate strain relief.

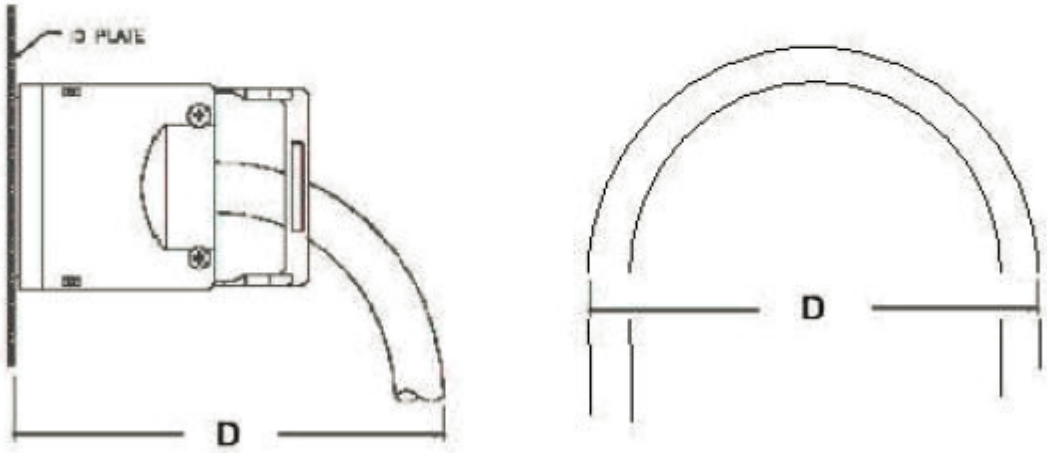

Do not kink InfiniBand cables.
Do not over bend InfiniBand cables.
Do not twist InfiniBand connectors.

Source:
ftp://ftp.software.ibm.com/eserver/xseries/1350CRG0507.pdf

Offers / Outlook

OFFER

MERITEC

50m cable 554,44 EUR

15m cable 393,71 EUR

2m cable 72,31EUR

4x board mount 10,83EUR

@ 80 pieces

- Breakout Board for SS4 to Infiniband
- buy sample cables
- measure electrical characteristics
- irradiate cable
- burn them

Open topics to be discussed?