BERKELEY LAB

LAWRENCE BERKELEY NATIONAL LABORATORY

U.S. DEPARTMENT OF ENERGY

Readout Electronics and Cables

Alan Poon

Institute for Nuclear and Particle Physics

Nuclear Science Division

Outline

- Introduction
- Front-end electronics for Ge detectors
- Cables
- R&D ideas

Low background rare event searches

- Signal expected in real-time experiments

Type of experiment	Signal	Detection (*Background*) rate
SNO **Solar neutrino experiment (1998-2006)**	Cherenkov light from e^-	~15 events t^{-1} d^{-1}
LUX **WIMP search**	Scintillation light and ionization from nuclear recoils	(*~ 15 events t^{-1} d^{-1}*)
Majorana **neutrinoless double beta decay search**	e^- in Ge diode detectors	(*< 1 event t^{-1} y^{-1}*)

Signal readout in Ge detectors

- Typical scheme (move hot components far away):

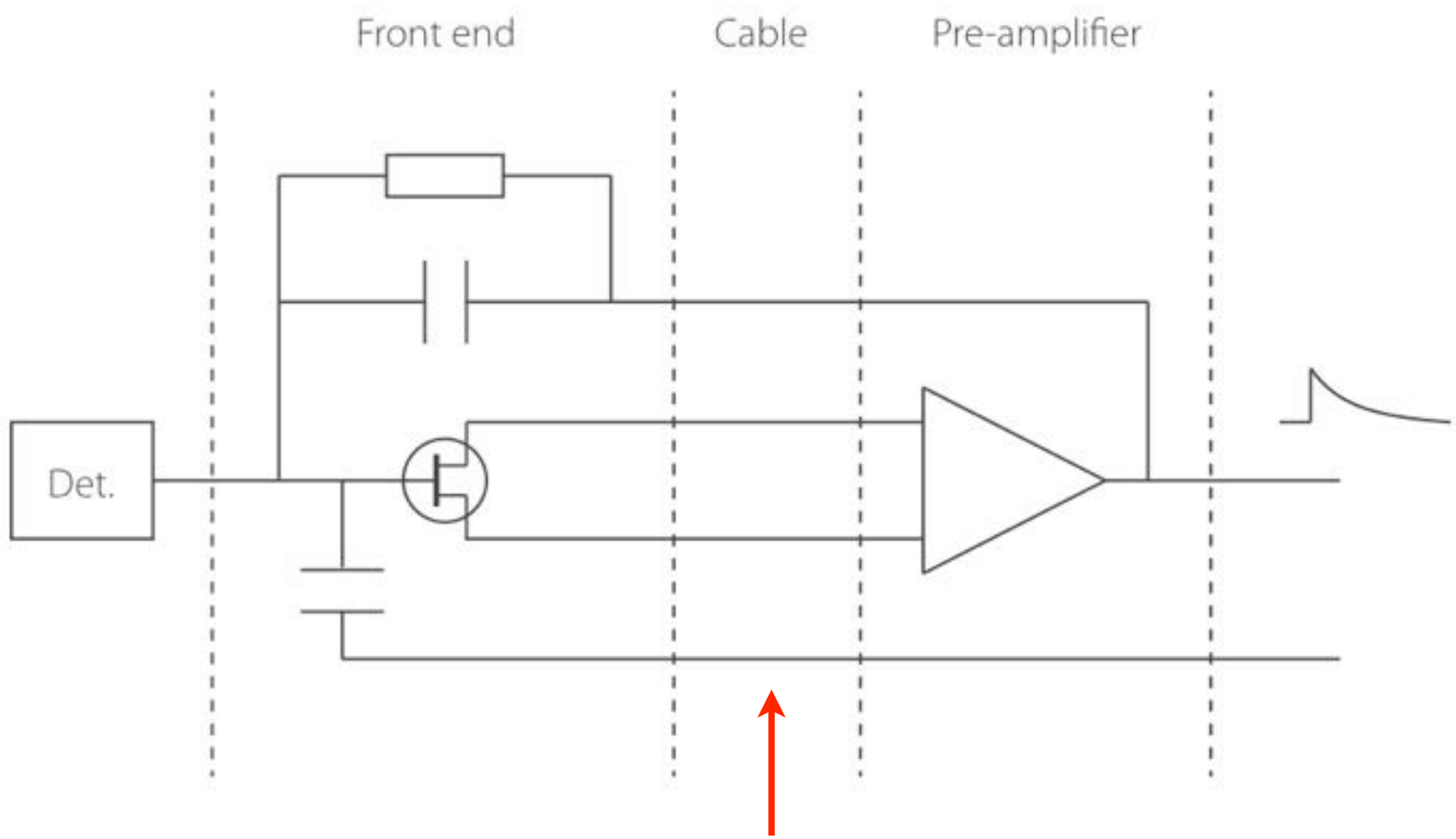

Issue: The cable length is of the order of 1-2 m now,
but may be much longer in a large scale 76Ge experiment

The ALARA principle

- Choose radiopure materials
- Keep hot stuff away from active detector volume

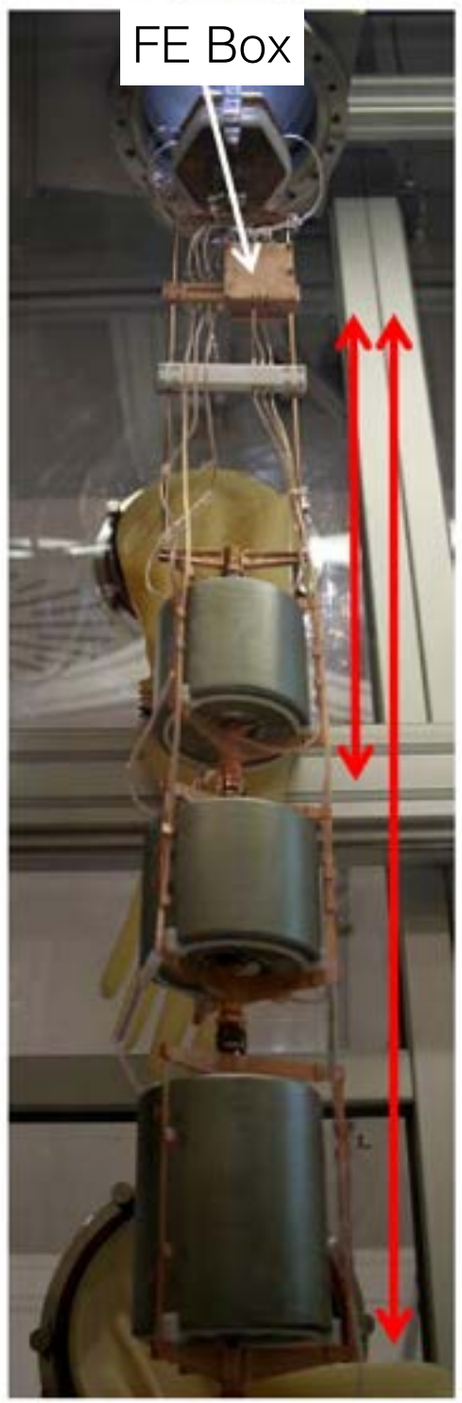

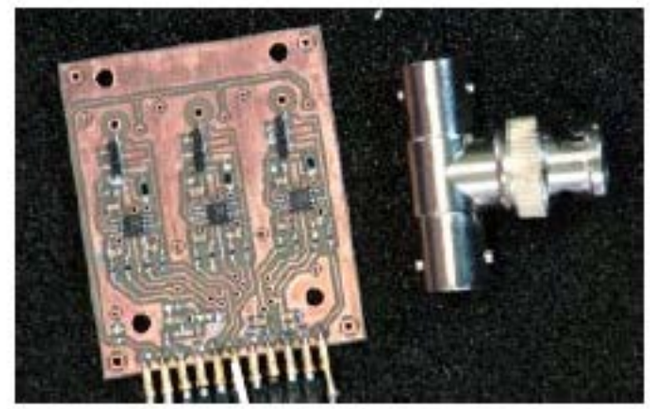

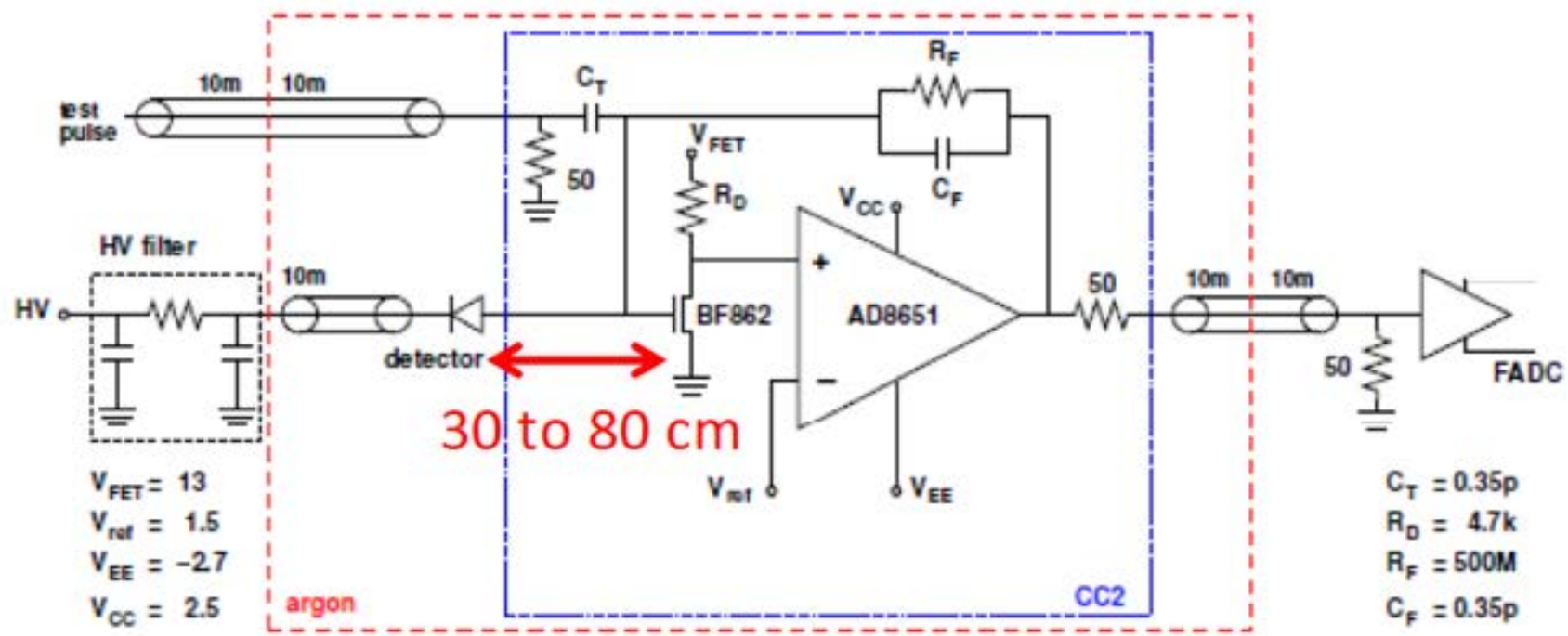

Ex: GERDA - Phase I

Cattadori, LRT 2015

The ALARA principle

- Choose radiopure materials
- Keep hot stuff away from active detector volume

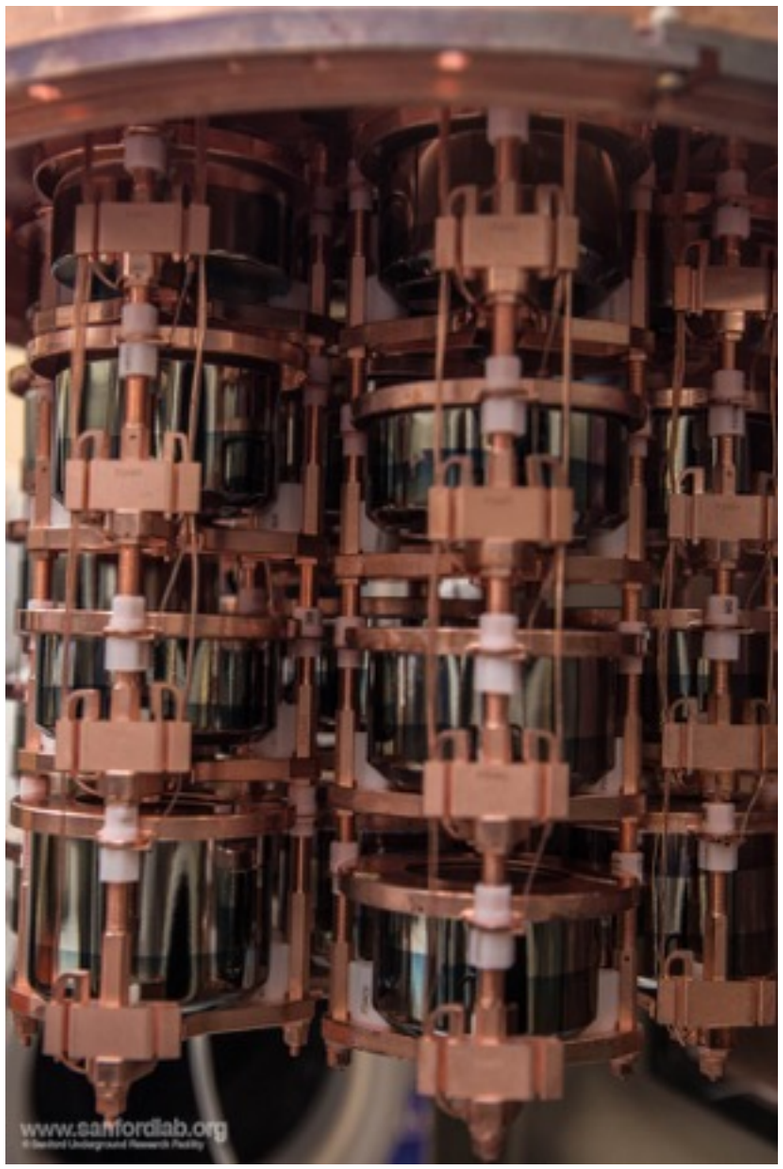

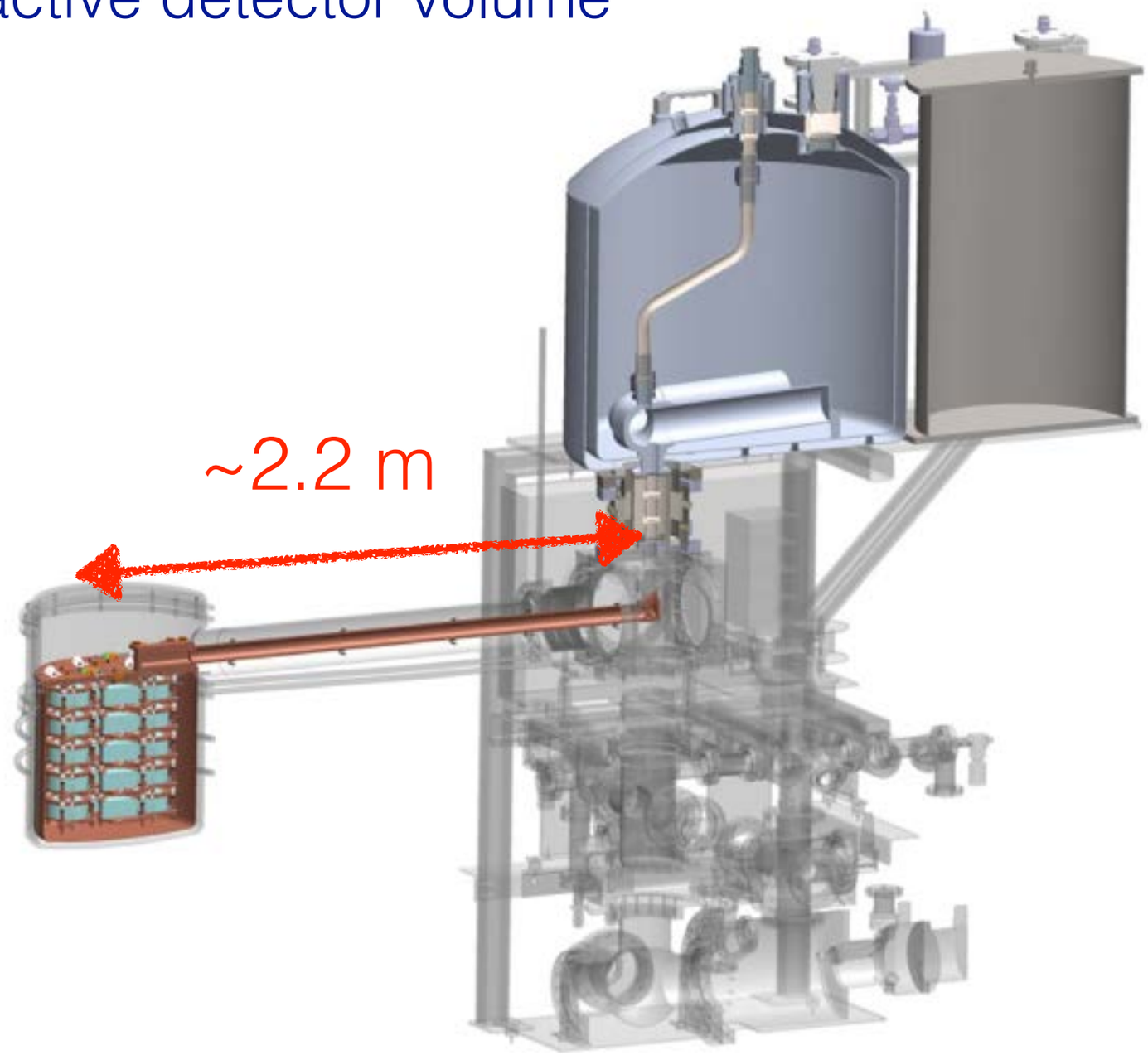

Ex: Majorana Demonstrator

Overview of MJD LMFE-preamp

Resistive feedback charge-sensitive preamplifier:

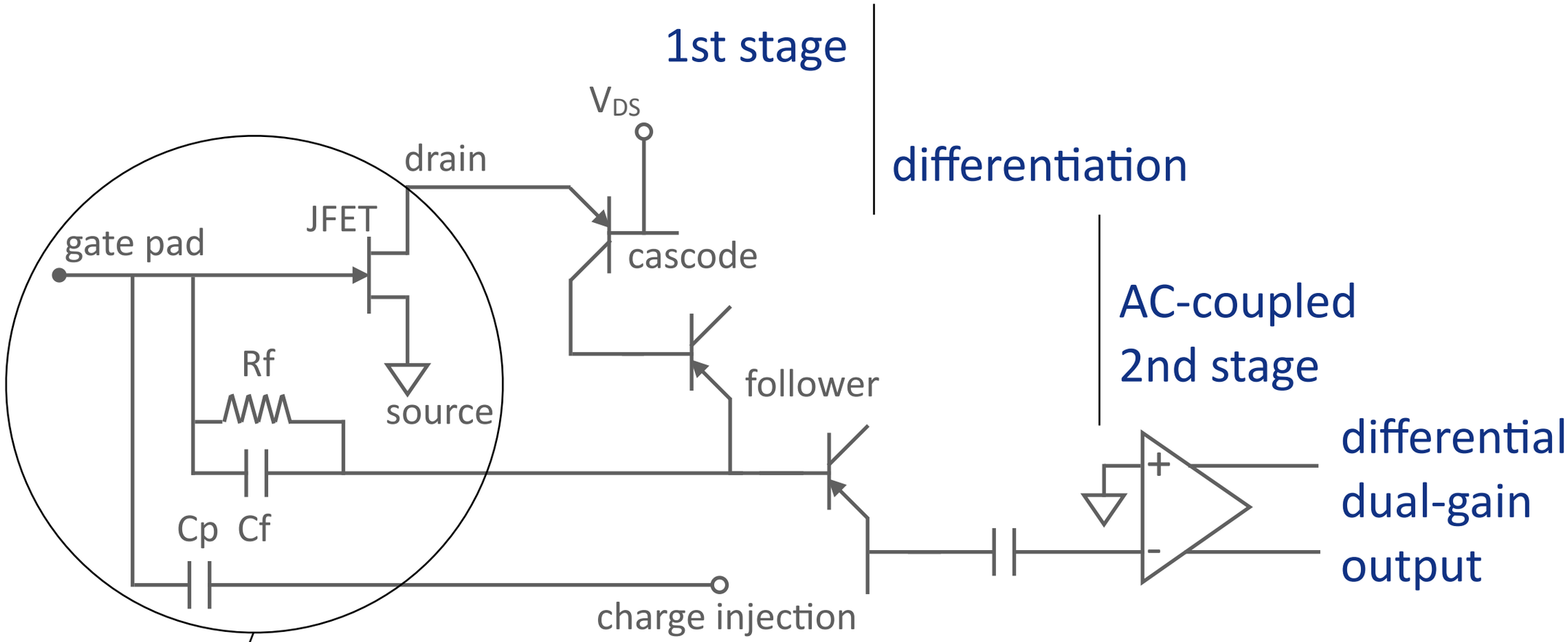

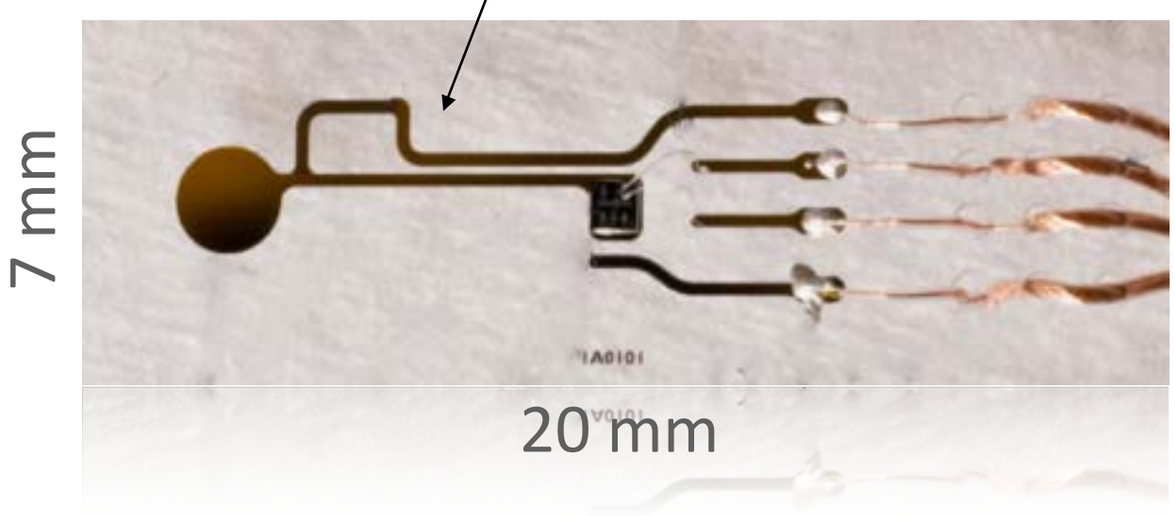

front-end:

n-channel JFET	External control (10%)
Rf ≈ 10 GΩ @ 85K	on drain to source
Cf = 0.17 pF	current (via V_{DS})
Cp ≈ Cf	

Reduced the component count by using stray capacitance

IEEE Nucl. Sci. Symp. Conf. Rec. 2011, 1976 (2011).

Production: wafers

Ti/Au sputtering

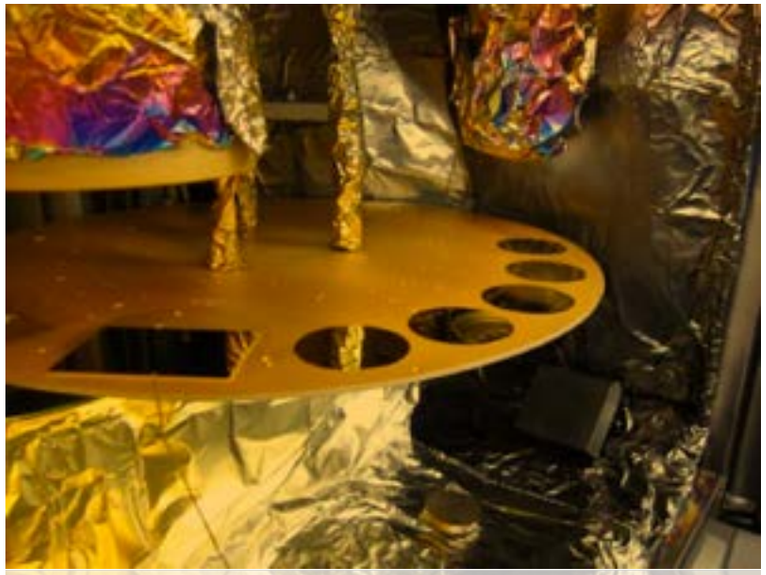

patterning traces

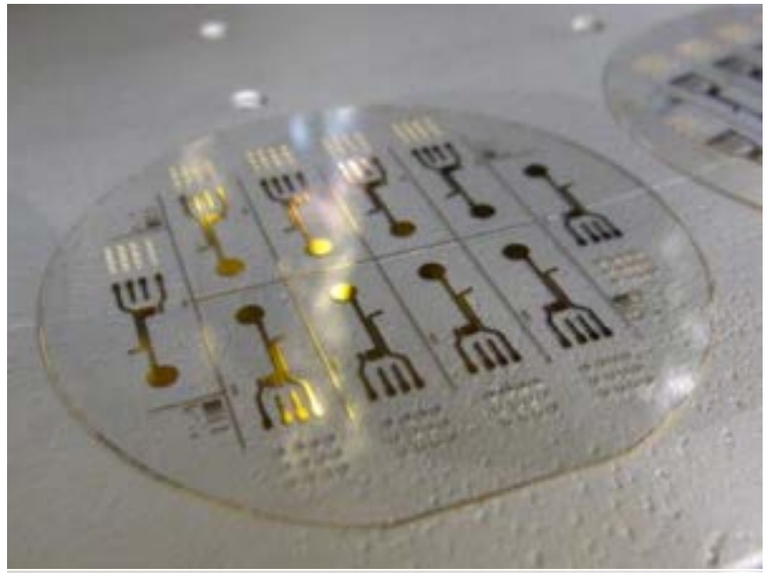

aGe sputtering

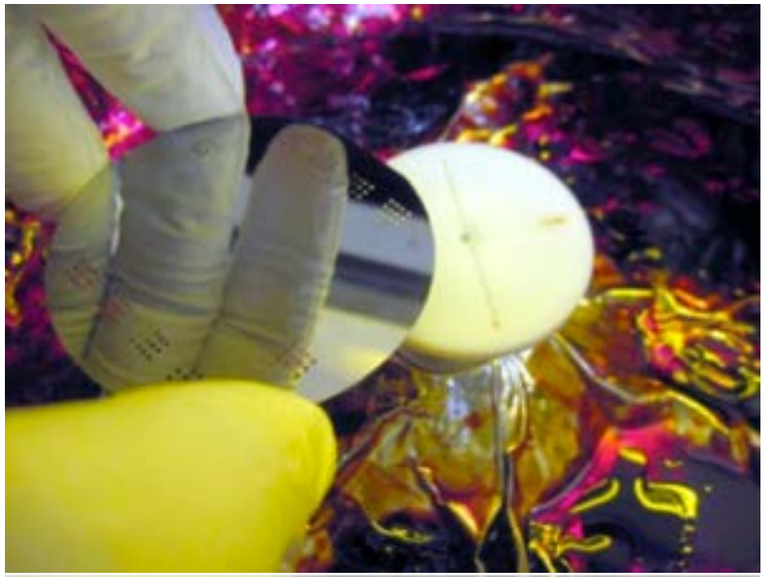

patterning aGe

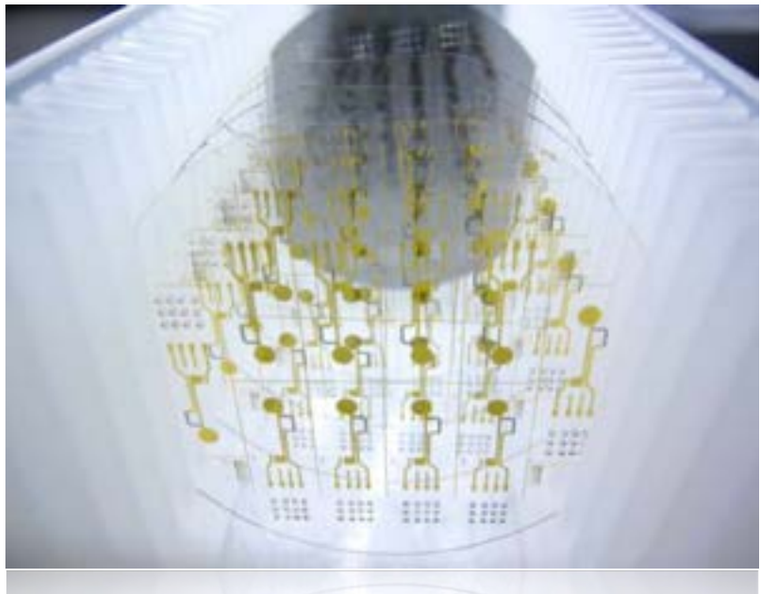

electrical tests

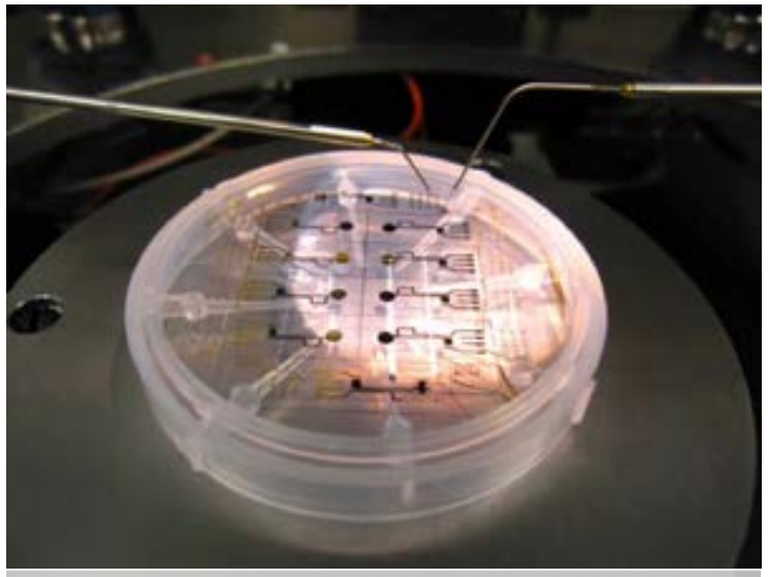

dicing boards

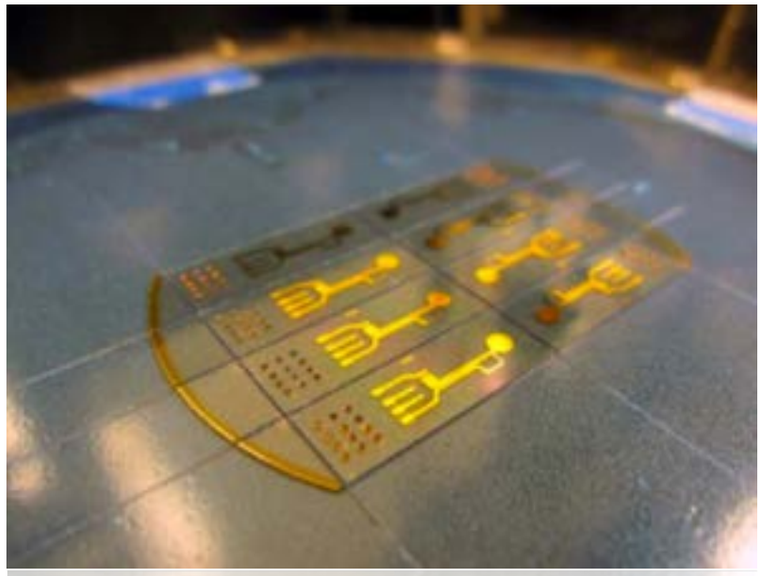

Production: on-board electronics

cable threading

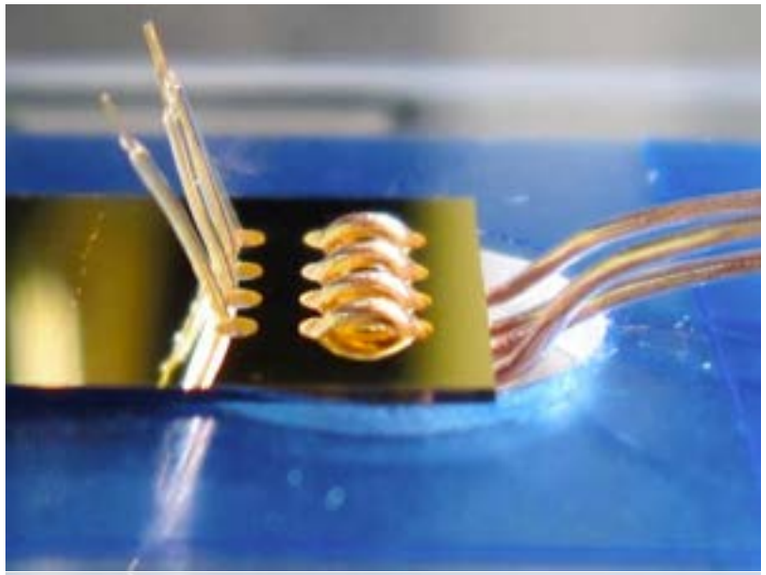

silver epoxying

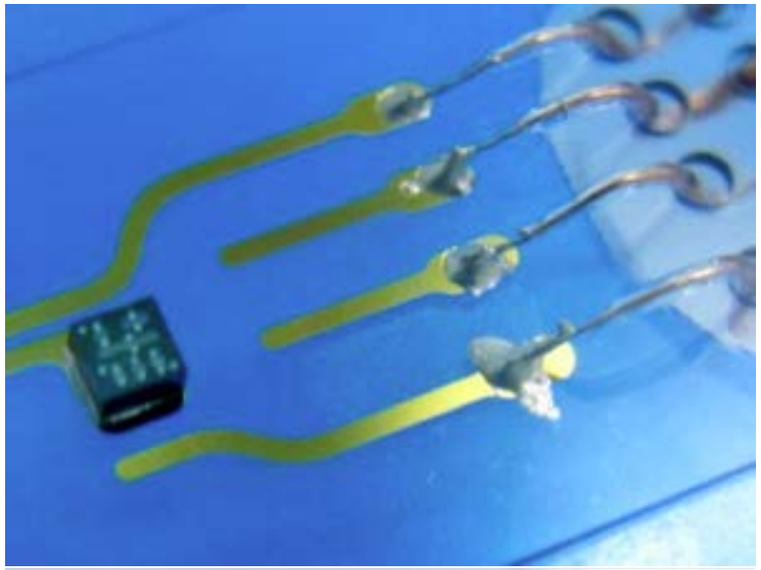

wire bonding

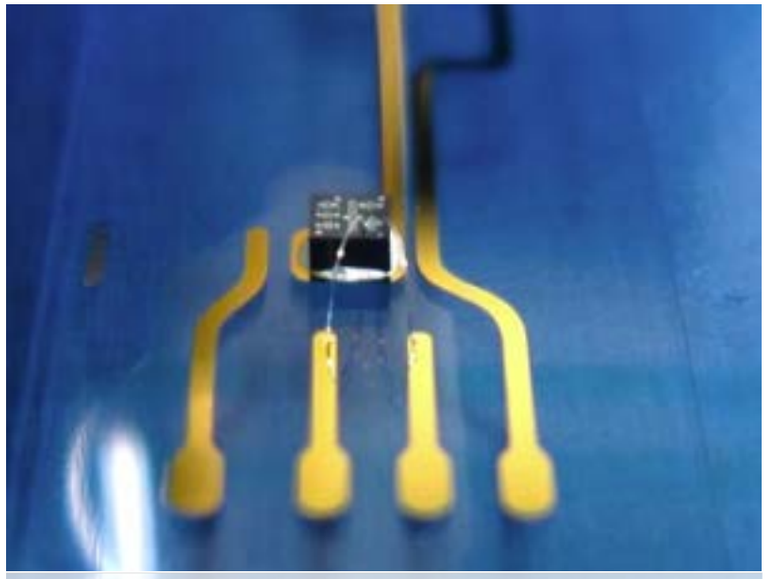

transport tray

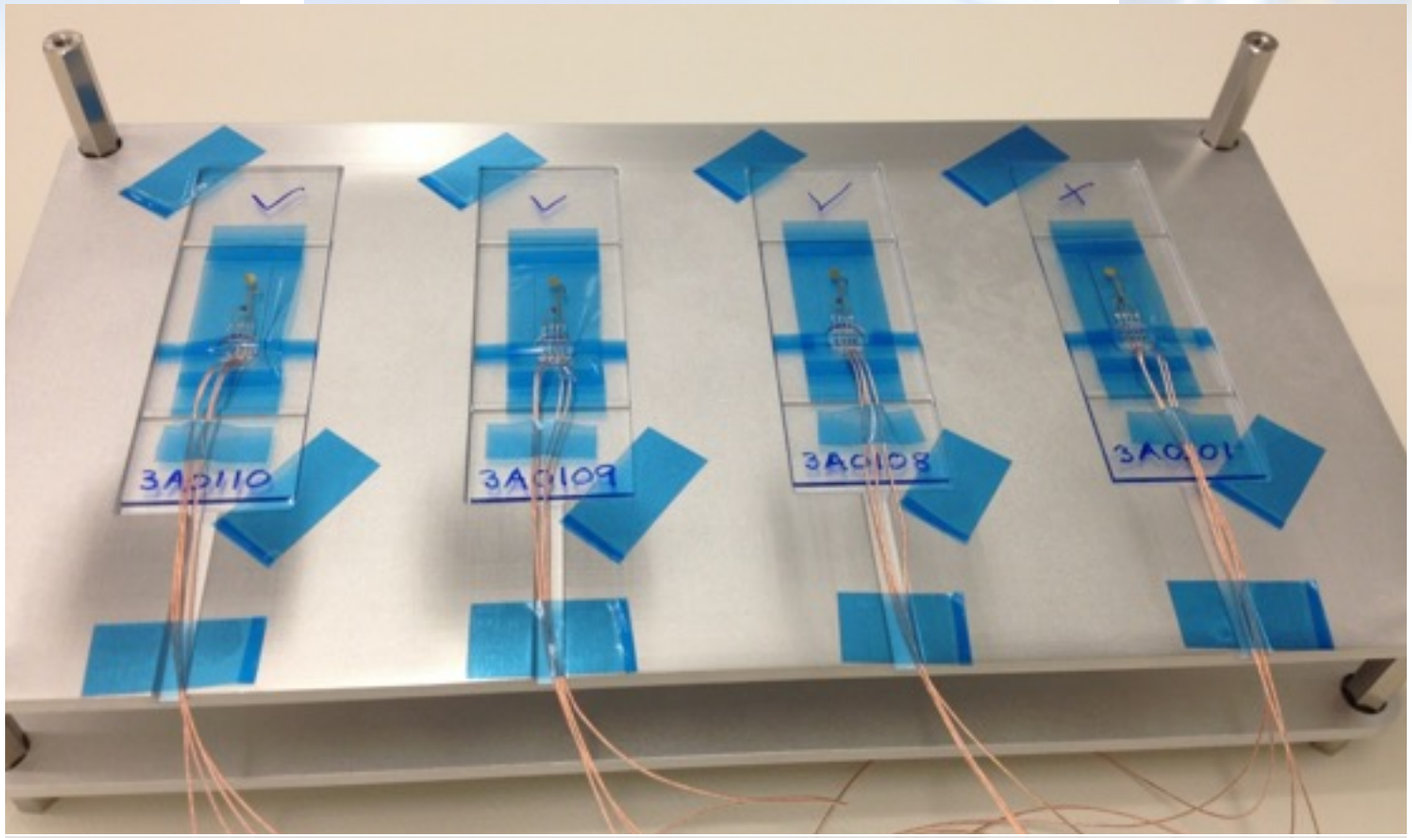

Making front-end electronics - MJD

- Component assays prior to production:

Component	Material	Purity (g / g)		Counts / ROI / t / y		Ref.
		^{232}Th	^{238}U	^{232}Th	^{238}U	
Substrate	Fused silica	101×10^{-12}	284×10^{-12}	0.0259	0.0616	MJ ICP-MS
Resistor	a-Ge	5×10^{-9}	5×10^{-9}	0.0001	0.0001	MJ ICP-MS
Traces	Au	$47(1)\times10^{-9}$	$2.0(0.3)\times10^{-9}$	0.0421	0.0015	MJ ICP-MS
Traces	Ti	$< 400\times10^{-12}$	$< 100\times10^{-12}$	~ 0	~ 0	MJ ICP-MS
FET	FET die	$< 2\times10^{-9}$	$< 141\times10^{-12}$	< 0.0107	< 0.0006	MJ ICP-MS
Bonding wire	Al	$91(2)\times10^{-9}$	$9.0(0.4)\times10^{-12}$	0.0004	~ 0	MJ ICP-MS
Epoxy	Silver epoxy	$< 70\times10^{-9}$	$< 10\times10^{-9}$	< 0.0685	< 0.0082	MJ gamma
Total				<0.1476	<0.0720	

- Largest backgrounds: fused silica substrate, gold traces
- Full board assays: ~2-3x higher in background

MiniPPC

Test detector for front-end electronics

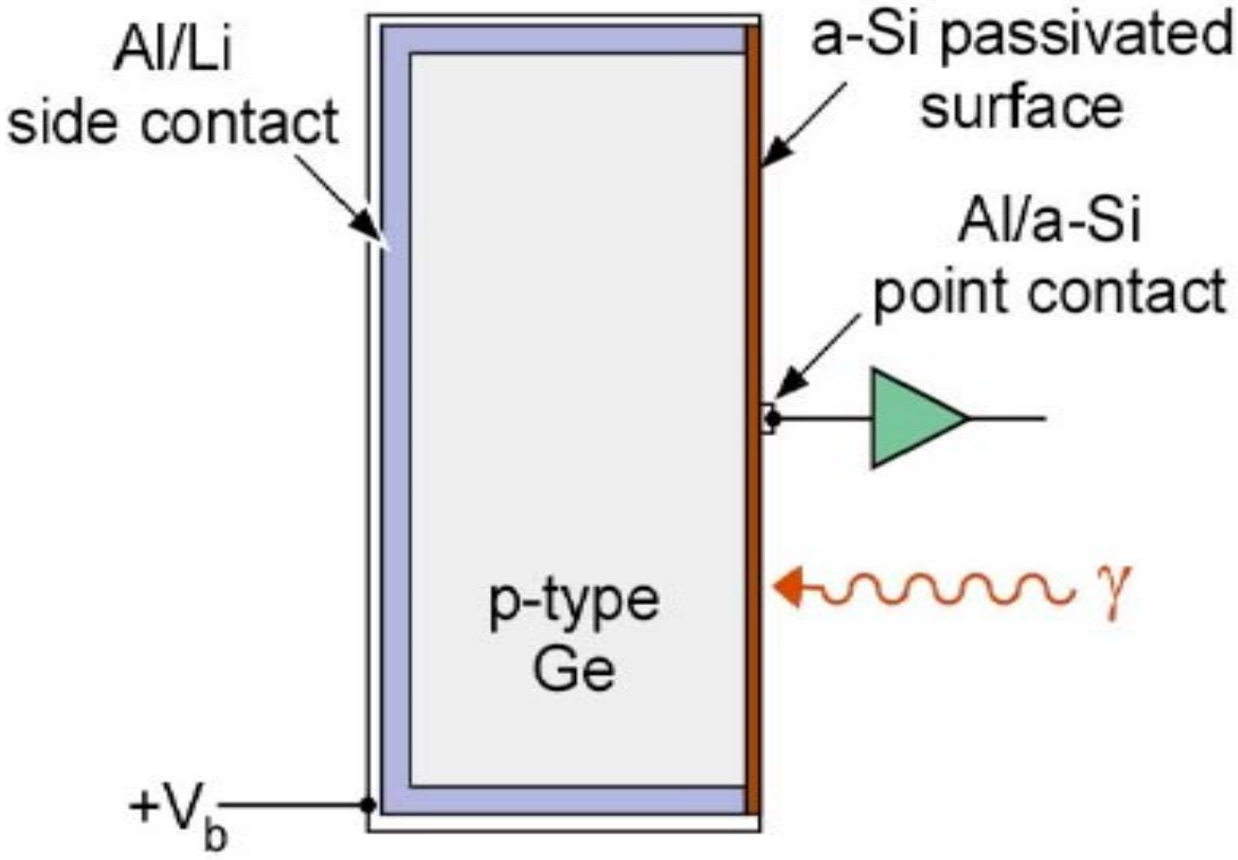

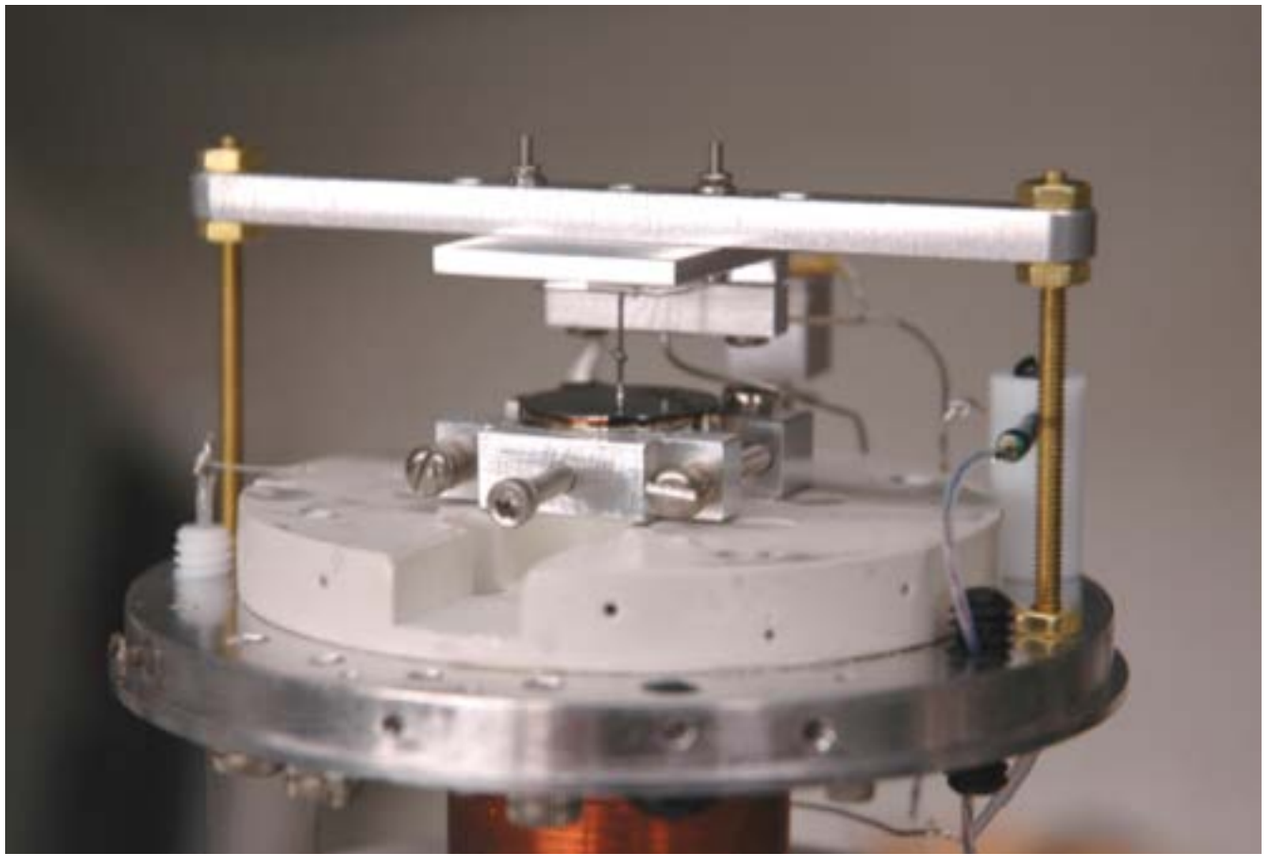

Diameter: 2 cm
Length: 1 cm
Impurity concentration: ~1 x 10^{10}/cm^3 p-type
Point contact: 1.5mm dia.

LMFE performance with MiniPPC

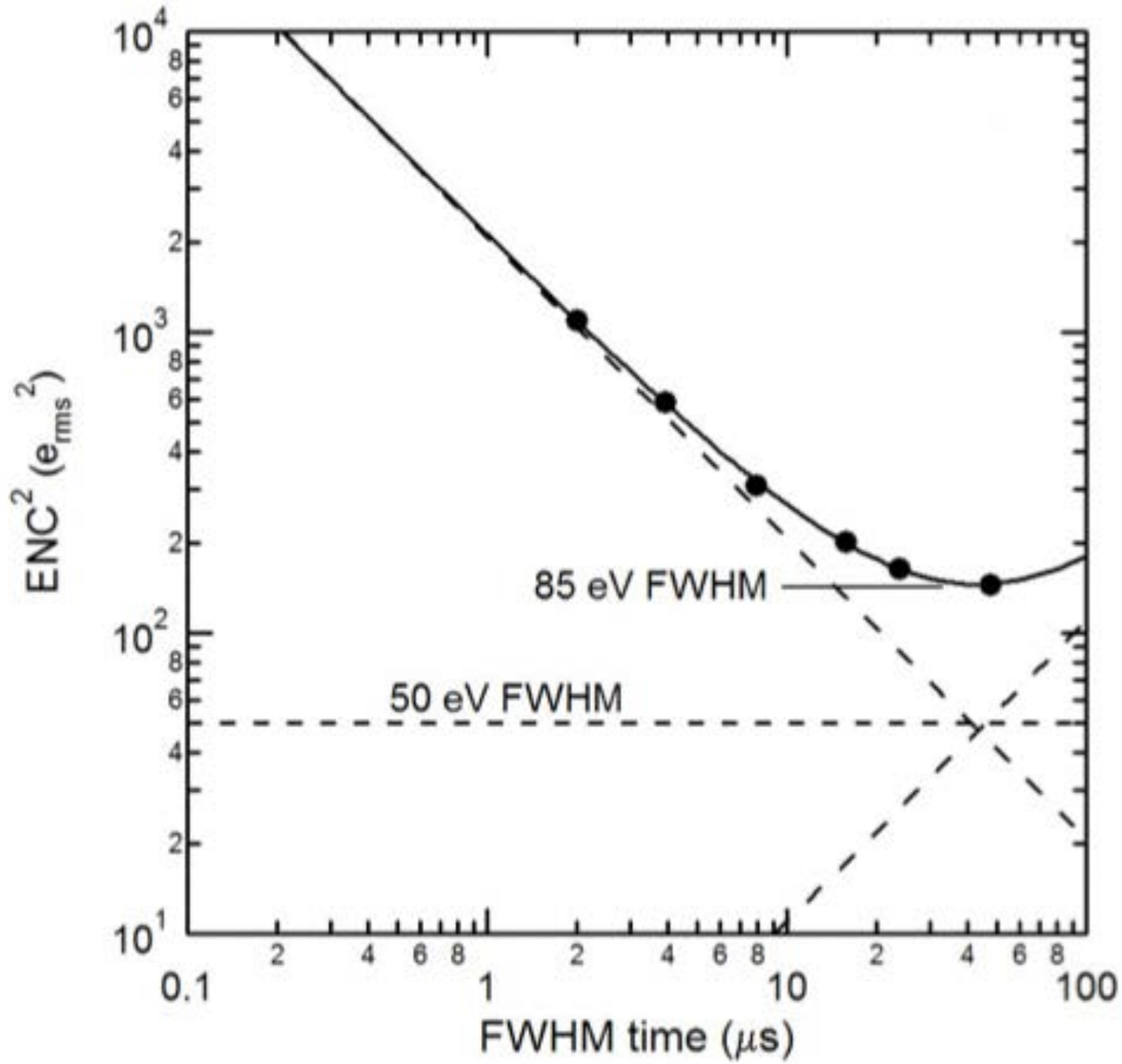

Forward bias reset JFET front-end

- **Continuous discharge**
  By forward biasing the input gate-to-source junction, the leakage and signal currents flow to ground.

- **Low noise dual-gate JFET**
  Feedback capacitor, between output of the front end and the JFET signal gate, provides charge gain. Typical charge-sensitive configuration.

- **Stable operating point**
  Second feedback loop to the JFET's substrate gate controls its drain current. No feedback resistor required.

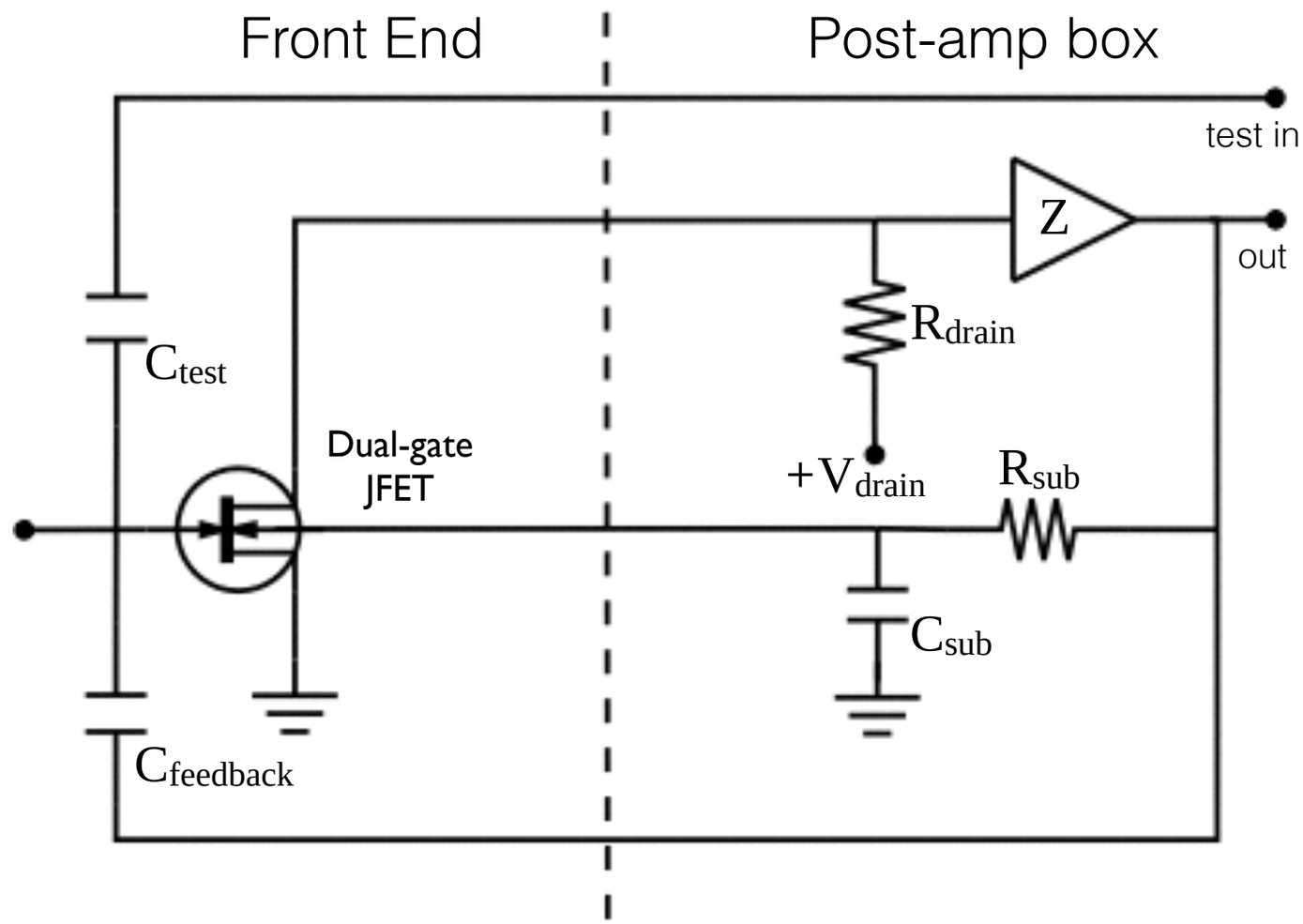

Jonathan Leon et al

Forward bias reset JFET front-end

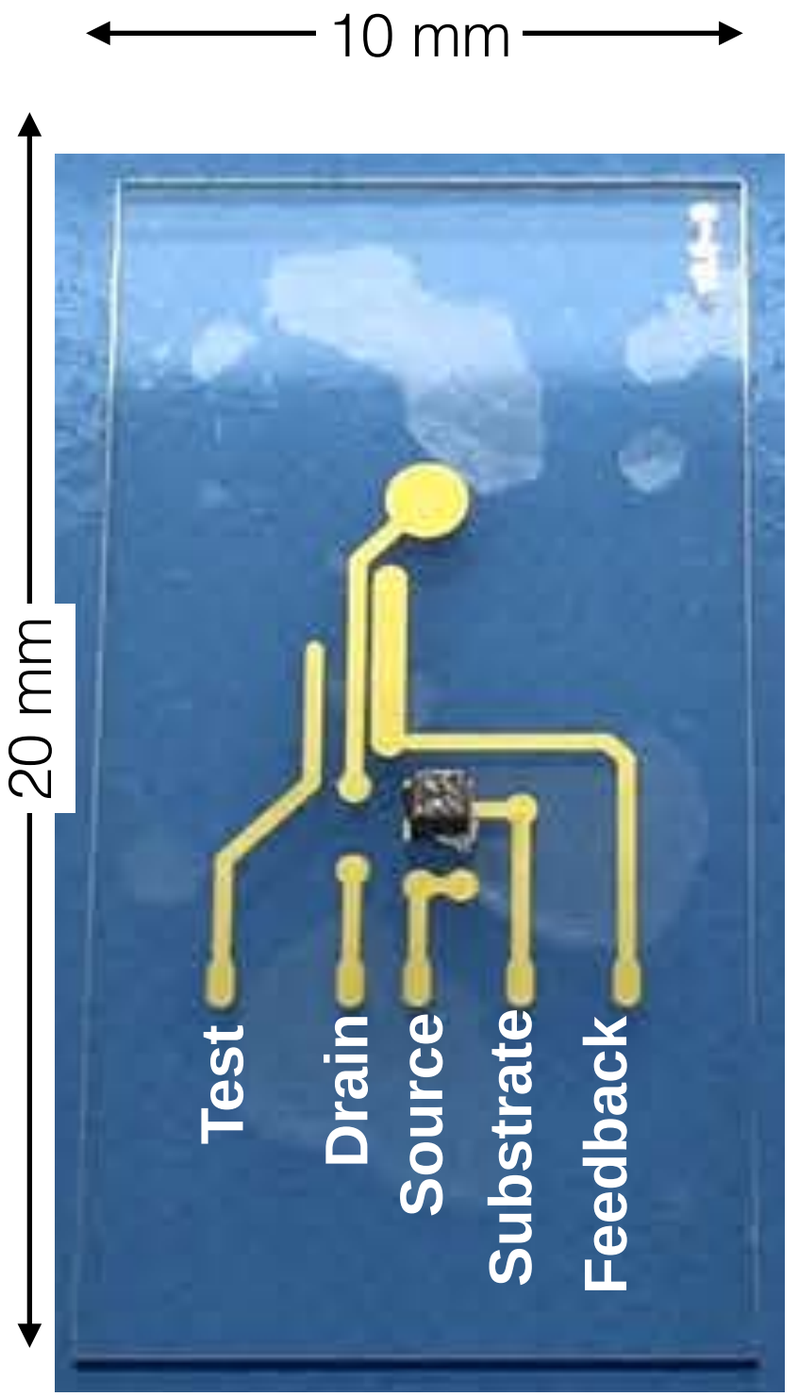

- Wafer material: 0.5 mm thick Fused silica (MarkOptics: Corning 7980)
  - low loss tangent, $O(10^{-4})$
  - Good thermal conductivity, 41.9 W/(m*K)
  - Established recipe for electrical connection.
- MX-30 Tetrode JFET Bare-die (MOXTEK)
  - 2 nV/√Hz
  - C_{gs} = 0.53 pF
  - g_m = 4 mS

Jonathan Leon et al

Performance

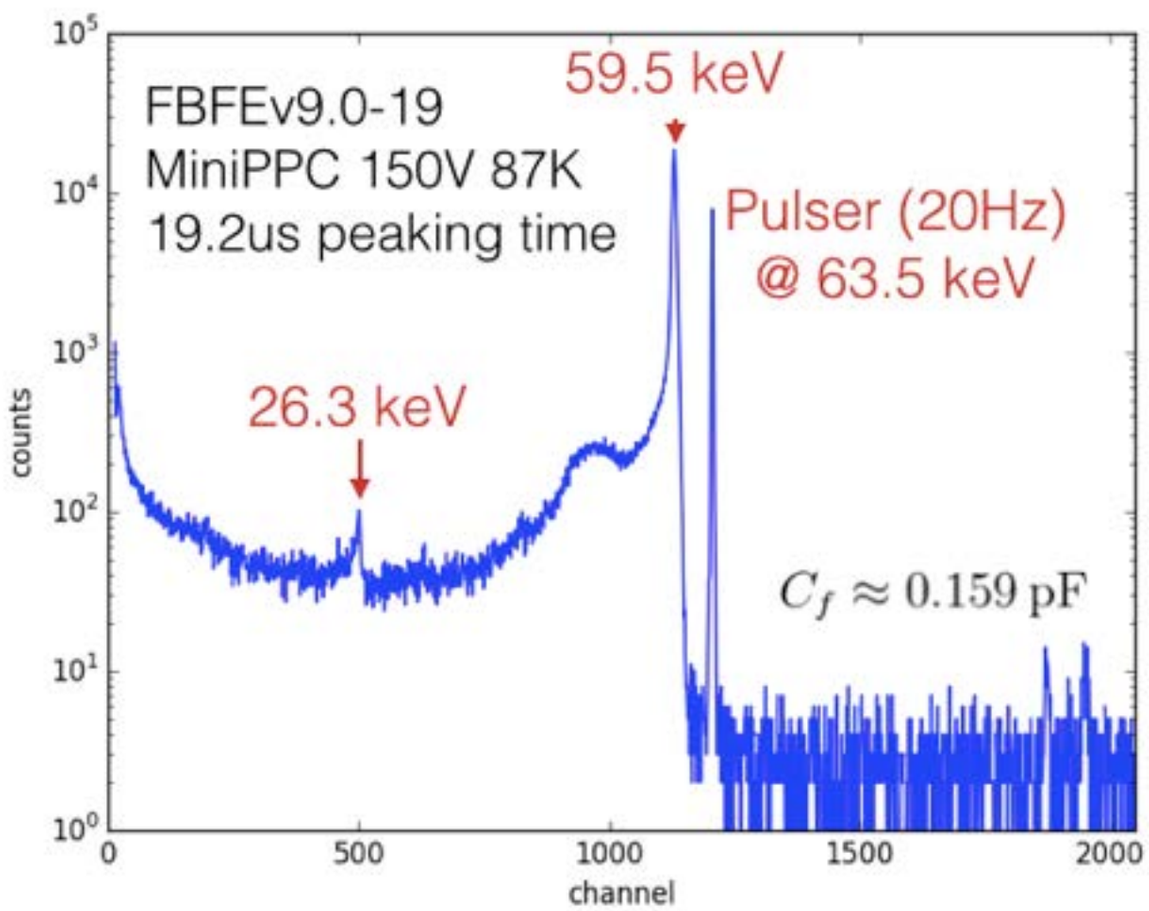

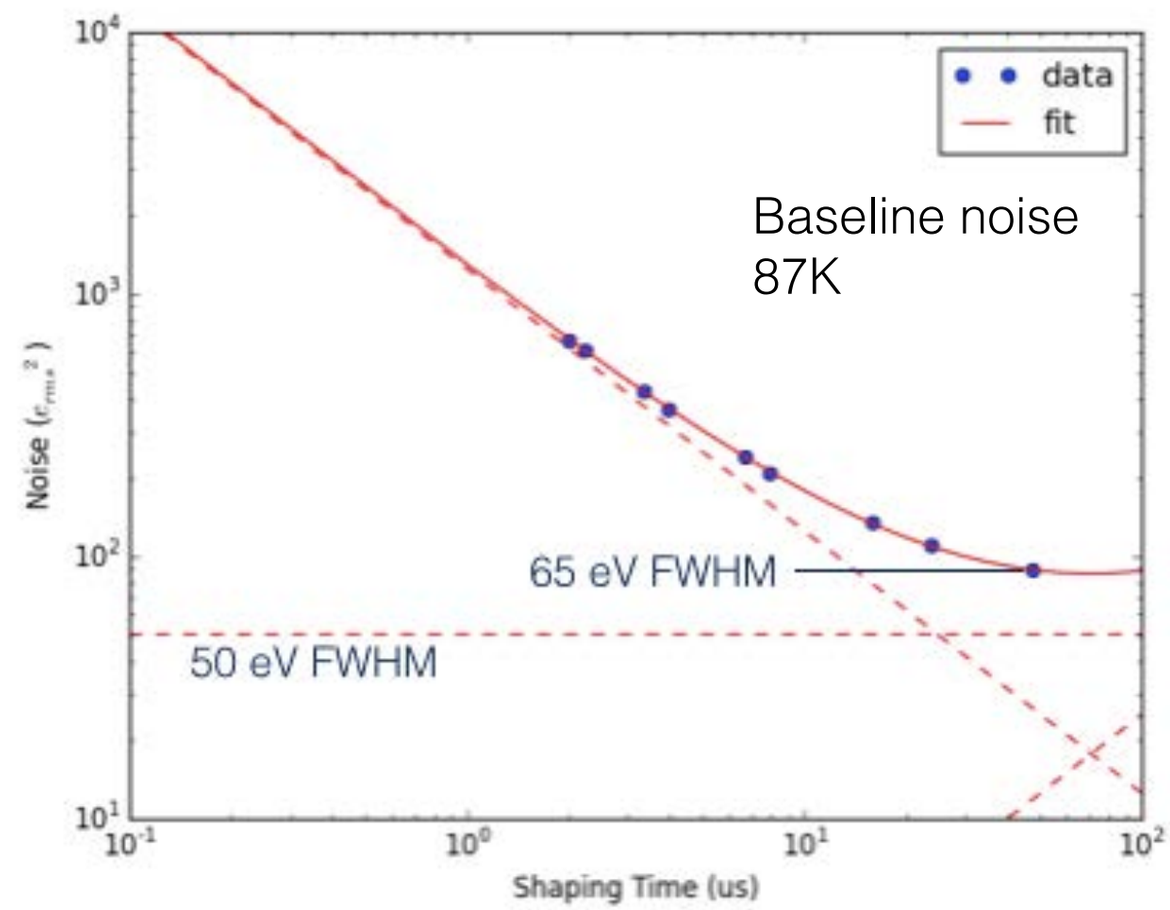

Ultra-low noise, mechanically cooled Ge

- MiniPPC
  - Reprocessed with smaller point contact
  - Point contact wire-bonded to “off-the-shelf” CMOS preamp (XGLab)
- Cryostat
  - Variable-temperature detector mount
  - Cooled by Gifford-McMahon cryocooler with vibration isolation between cooler and cold finger
- Tests
  - Noise performance vs operating temperature
  - 39 eV FWHM (pulser) at T=43K

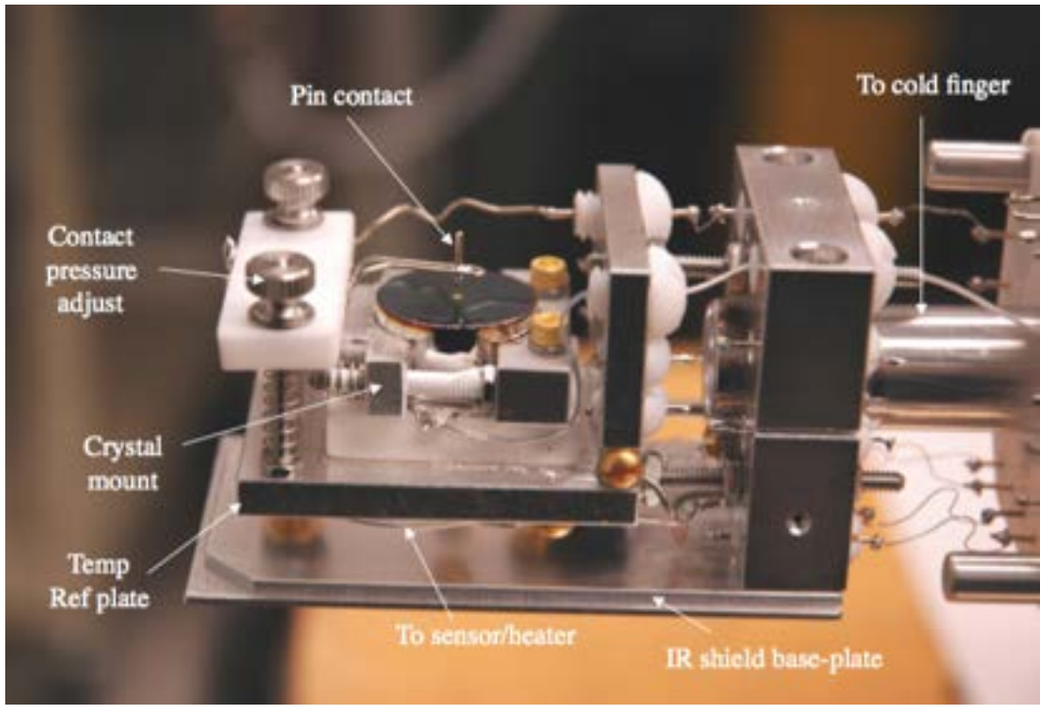

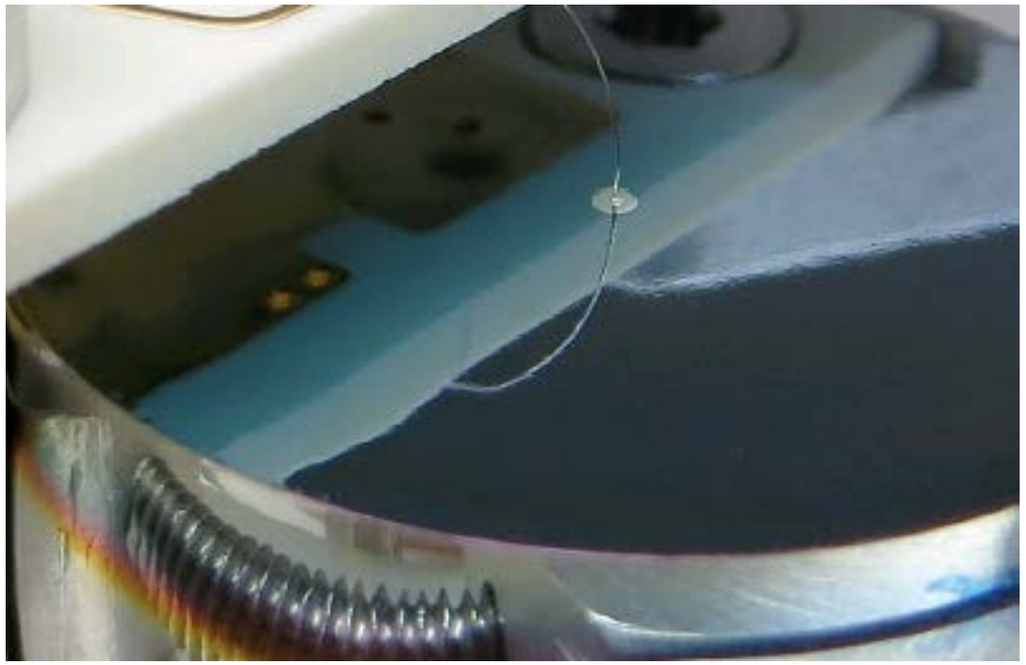

P. Barton et al. 2015

Ultra-low noise, mechanically cooled Ge

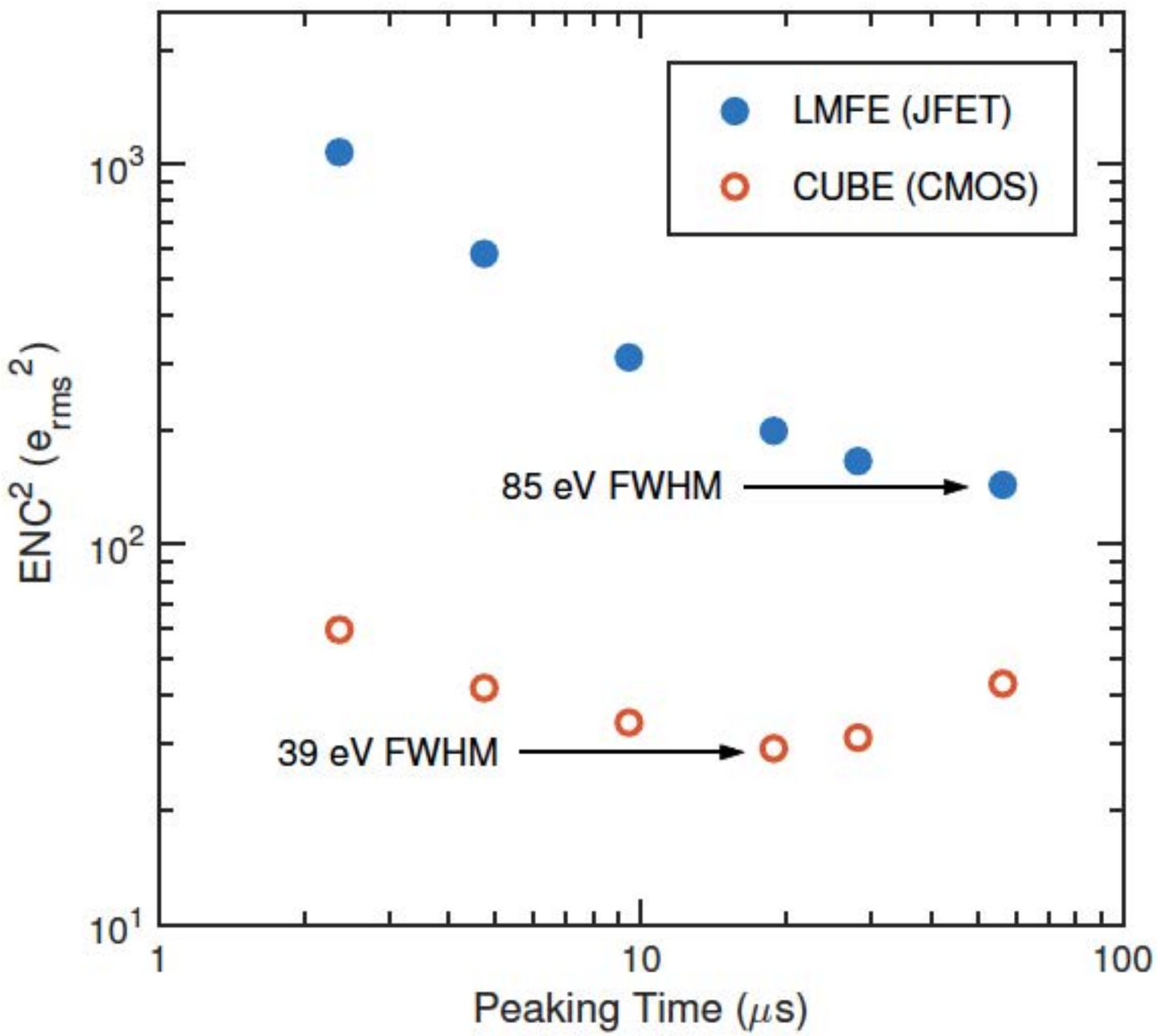

P. Barton et al. 2015

Coaxial Cables - GERDA

- GERDA Phase-1

^{228}Th: 1.1±0.5 mBq/kg
^{238}U < 59 mBq/kg
Cu/PTFE 1 mm OD
linear density = 2.7 g/m

Table 3 Cables deployed in the 1-string and 3-string locks.

cable	ref.	type	1-string	3-string
Habia SM50	[66]	50 Ω, coaxial	15	24
SAMI RG178	[67]	HV (4 kV), coaxial	4	-
Teledyne Reynolds 167-2896	[68]	HV (18 kV), coaxial	-	10
Teledyne Reynolds 167-2896	[68]	HV (5 kV), unshielded	1	2
total number			20	38

[arXiv:1212.4067v1]

Construction:

Conductor	Silver plated high strength copper alloy (1x0,16)	0,16
Dielectric	Solid PTFE	0,52
Braid	Silver plated copper (0,06)	0,85
Jacket	FEP, Brown-transparent	1,00
Weight	2,7 kg/km	
Temperature rating (°C)	-55 / +200°C	
Order reference	**30000-050-00**	

Over an order of magnitude too radioactive for MJD

- Silver-plated Cu is likely hot
- Scaling to a HV cable (5 kV DC rating) means even higher activity

Other commercial options?

Coaxial, Ribbon and Multi-Conductor Cables

This page of product is RoHS compliant.

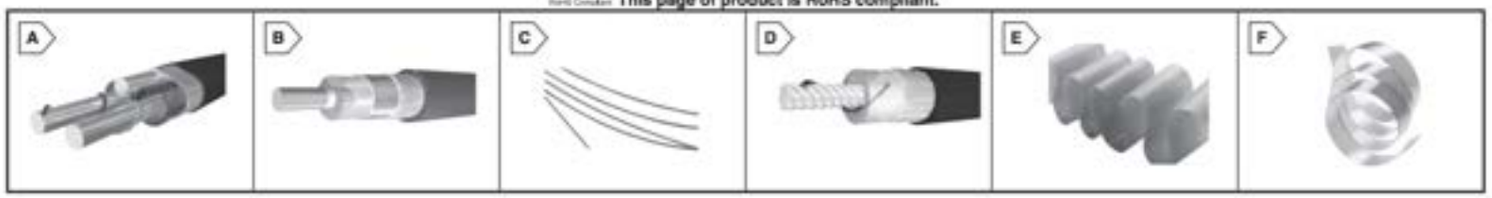

TEMP-FLEX a molex company **COAXIAL CABLES**

For quantities greater than listed, call for quote.

MOUSER STOCK NO.	Temp-Flex Part No.	Fig.	Nominal OD (in.)	Signal Conductors	Braid Shield	Color	Price Per Ft. 1	10	25	50
Twinax Cable • Capacitance: 14.5pF/ft. • Differential Impedance: 100+/-5 Ohms										
538-100TX-08	100TX-08	A	0.049+/-0.005	32AWG	44AWG	1-Blue, 1-Green	2.12	1.99	1.83	1.53
Flexible Microwave Coaxial Cables • Capacitance: 29.0pF/ft. (95pF/ft.) • Impedance: 50+/-1 Ohms										
538-141SC-1901	141SC-1901	B	0.157+/-0.005	19AWG	40AWG	Blue	11.56	10.87	9.96	8.37
538-047SC-2901	047SC-2901	B	0.056+/-0.003	29AWG	46AWG	Blue	4.49	4.22	3.87	3.25
Microminiature Coaxial Cable • Capacitance: 30pF/ft. Nominal • Impedance: 50+/-2 Ohms										
538-086SC-2401	086SC-2401	B	0.101+/-0.005	24AWG	40AWG	Blue	7.40	6.96	6.38	5.36
538-50MCX-37	50MCX-37	C	0.125+/-0.005	42AWG	48AWG	Blue	2.55	2.39	2.20	1.85
High Speed Data Cables • Capacitance: 30pF/ft. Nominal • Impedance: 50+/-2 Ohms										
538-50CX-41	50CX-41	D	0.071	30AWG, 7/38	40AWG	Black	2.81	2.64	2.42	2.04
538-50CX-42	50CX-42	D	0.100	26AWG, 7/34	38AWG	Black	3.64	3.42	3.14	2.63

TEMP-FLEX a molex company **FLAT FEP RIBBON CABLES**

Mouser catalogue

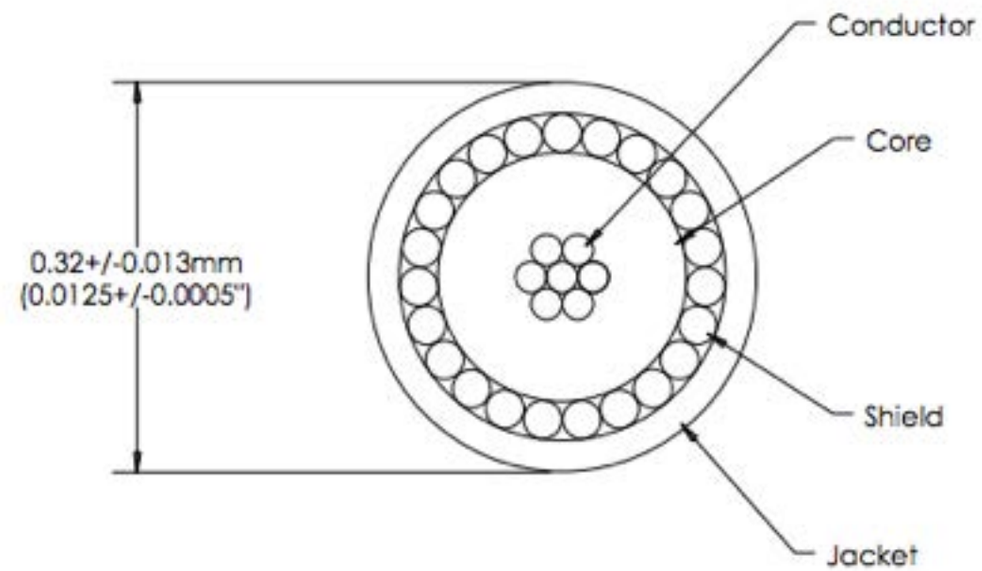

TEMP-FLEX a molex company

Enlarge

Mouser Part #:	538-50MCX-37
Manufacturer Part #:	50MCX-37
Manufacturer:	Temp-Flex
Description:	Coaxial Cables 42AWG PFA, 50 OHM MICRO COAX, PER FT

Learn more about Temp-Flex 50MCX-37

Page 1,389, Mouser Online Catalog
Page 1,389, PDF Catalog Page
Data Sheet

Radiopurity concerns:

- dye in the jacket
- silver-plated copper alloy in braid and central conductor

It became clear that we needed to do a special production run

Coaxial Cables - MJD

- FEP and PFA
  - have high dielectric strength (Dupont: 260 kV/mm)
  - are radiopure

Cu

dielectric

Sample	Lab	Reported in pg/g				Reported in μBq/kg			
		^{232}Th	± 1σ	^{238}U	± 1σ	^{232}Th	± 1σ	^{238}U	± 1σ
Cu conductor wire (signal, CFW)	LBNL	<30	-	<50	-	<120	-	<620	-
Cu conductor wire (high voltage, CFW)	LBNL	<30	-	180	50	<120	-	2200	620
Cu wire 50AWG (uncleaned, MWS[1])	LBNL	120	20	73	28	490	80	910	350
Cu wire 50AWG (cleaned, MWS)	LBNL	30	30	42	10	120	120	520	120
PFA416[2]	PNNL	2.60	**	0.89	**	10.66	**	11.09	**
PFA340A[3]	PNNL	3.28	**	1.90	**	13.45	**	23.57	**
FEP 106	PNNL	0.11	**	1.96	**	0.43	**	24.36	**
FEP NP20	PNNL	0.99	**	0.61	**	4.05	**	7.60	**
FEPTE 9494	PNNL	4.03	**	0.71	**	16.52	**	8.75	**

- The radiopurity of the Cu drives the background budget:
  - reduce OD of central conductor
  - reduce OD of inner dielectric
  - helical shield (instead of braid)

Coaxial Cables - MJD

- Contracted Axon' in France to make the "picocoax" cable

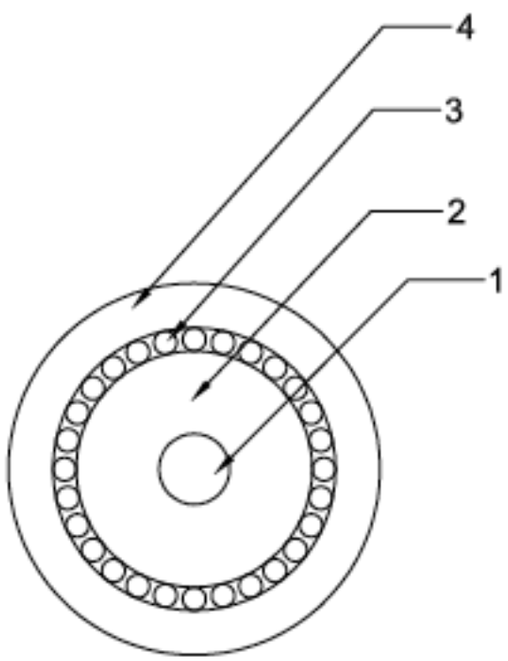

		Material	Signal	HV
1	central conductor	Bare Cu	0.0762 mm ϕ	0.152 mm ϕ
2	inner dielectric	FEP / PFA	0.254 mm ϕ	0.77 mm ϕ
3	helical shield	Bare Cu	AWG50	AWG50
4	jacket	FEP / PFA	0.4 mm ϕ	1.2 mm ϕ
Linear mass density			0.4 g/m	3 g/m

Coaxial Cables - MJD

- Contracted Axon' in France to make the "picocoax" cable
- Additional testing, cleaning in ultrasonic bath and drying between production steps (conductor prep, inner dielectric extrusion, shielding, jacket extrusion).

HV Cable	Technique	Th (c/ROI/t/y)	U (c/ROI/t/y)
Projection	Simulation & assay	<0.02	<0.06
Axon' - Run 1 (QA issue at factory - no cleaning steps)	ICPMS	1.1	16.5
Axon' - Run 2	ICPMS & Gamma	<0.004	<0.081

Goal: << 1 c/ROI/t/y

Processing PCBs

- Once selected the proper raw material →Important not to spoil its radiopurity by PCB process.
- Avoid finishing protective layers (soldermasks etc.)
- Minimize Cu deposition
- **Gold finishing required for bonding (typically <1 um) introduces significant U contaminations. Minimize golded surfaces (in GERDA few mm^2/detector)**

				Solfor		Fosfor		Cleaning		PreAu		Micro Etching		Gold		Nickel
39	K	ppb		2000		4900		6100		Saturate		96000		32000000		38000
208	Pb	ppb	<	0,3		0,7		11		28		17		2	<	10
232	Th	ppb	<	0,03		0,05	<	0,03		1		0,04		1,7	<	0,3
238	U	ppb		0,13		22		0,8		5,8		0,81		7,7	<	0,3

Cattadori, LRT 2015

A cryogenic temperature sensor

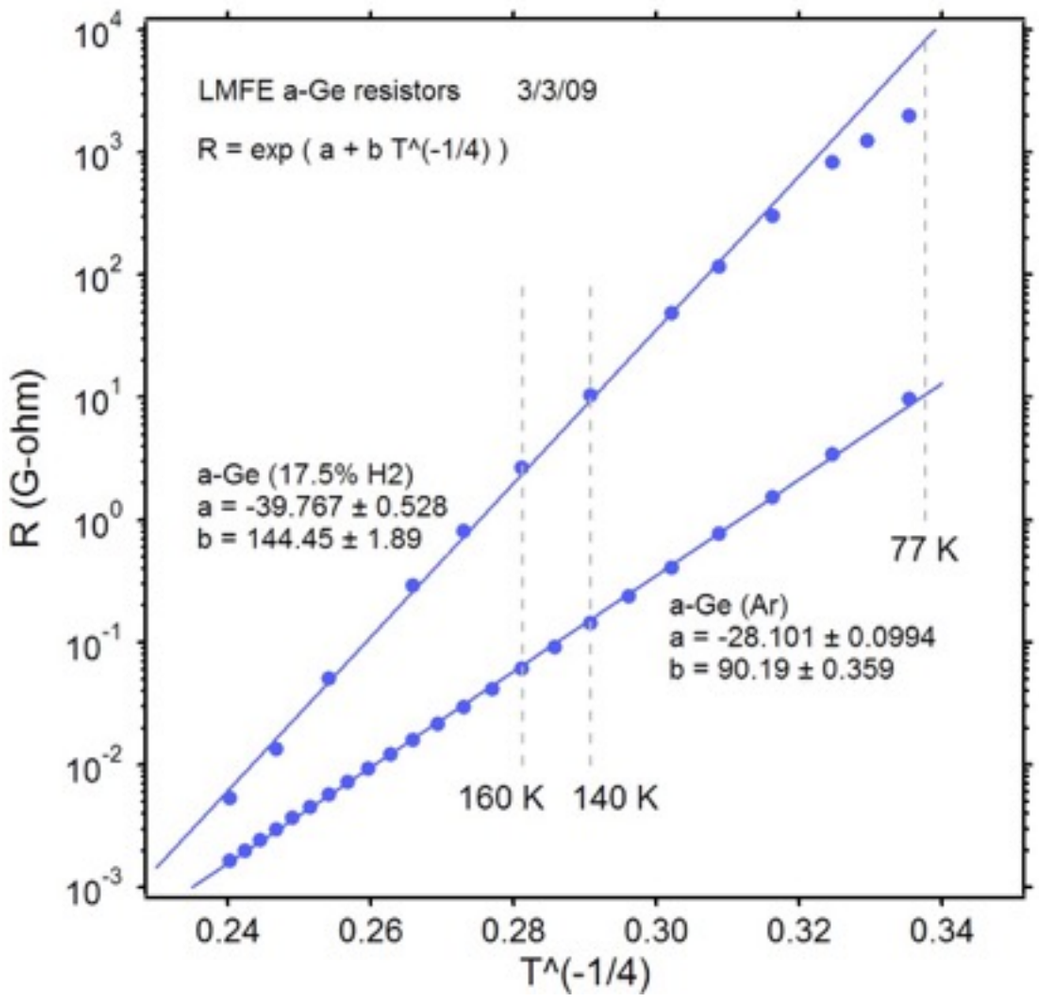

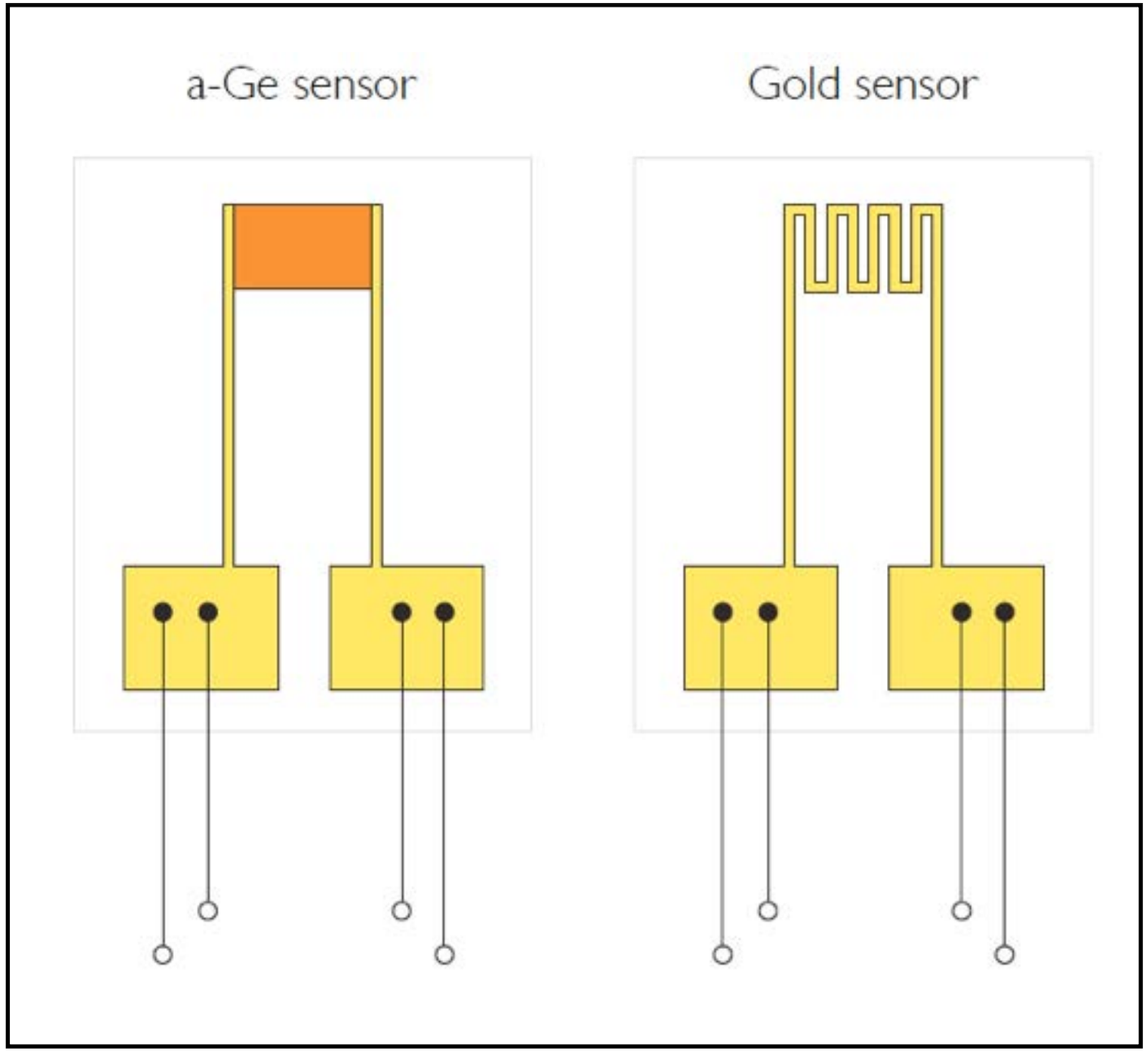

Designs

Can we use a better substrate?

Details in Dhar et al., arXiv:1508.05757

A cryogenic temperature sensor

Microelectronics with **parylene** substrate:

- "Low" background, use with small mass
- "flexible circuitry"
- applications in medical fields

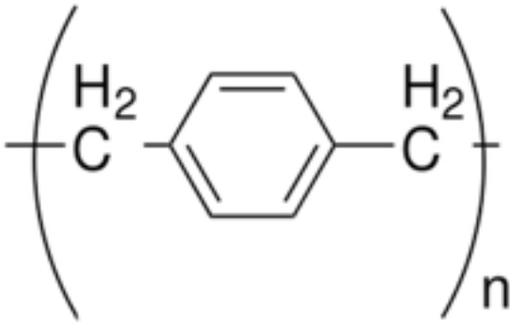

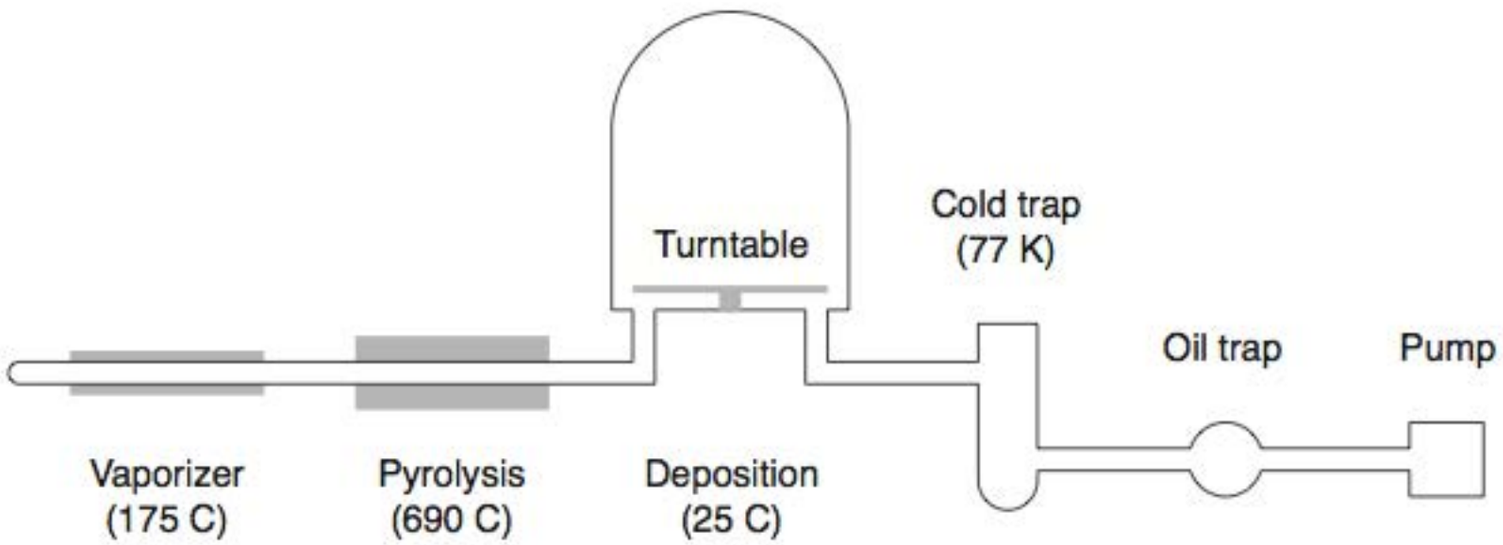

#	Material	Method	K (10^{-9} g/g)	^{232}Th (10^{-12} g/g)	^{238}U (10^{-12} g/g)
55	Parylene N dimer, Para Tech Coating Inc.	NAA	-	<50	<30
56	Parylene, Speciality Coating Systems™ Inc.	NAA	5800±1300	<850	<1700
57	Parylene C, dimer, Speciality Coating Systems™ Inc.	ICPMS	2110±15	390±30	6230±110
58	Parylene C, dimer pre cleaned, Spec. Coat. Sys. Inc.	ICPMS	<108	37±3	4230±60
59	Parylene C, infusion rod bump, Spec. Coat. Sys. Inc.	ICPMS	<320	250±60	46±20
60	Parylene C, inlet, Speciality Coating Systems™ Inc.	ICPMS	<430	140±30	83±24
61	Parylene C, table, Speciality Coating Systems™ Inc.	ICPMS	923±86	530±30	250±60

Thermal testing

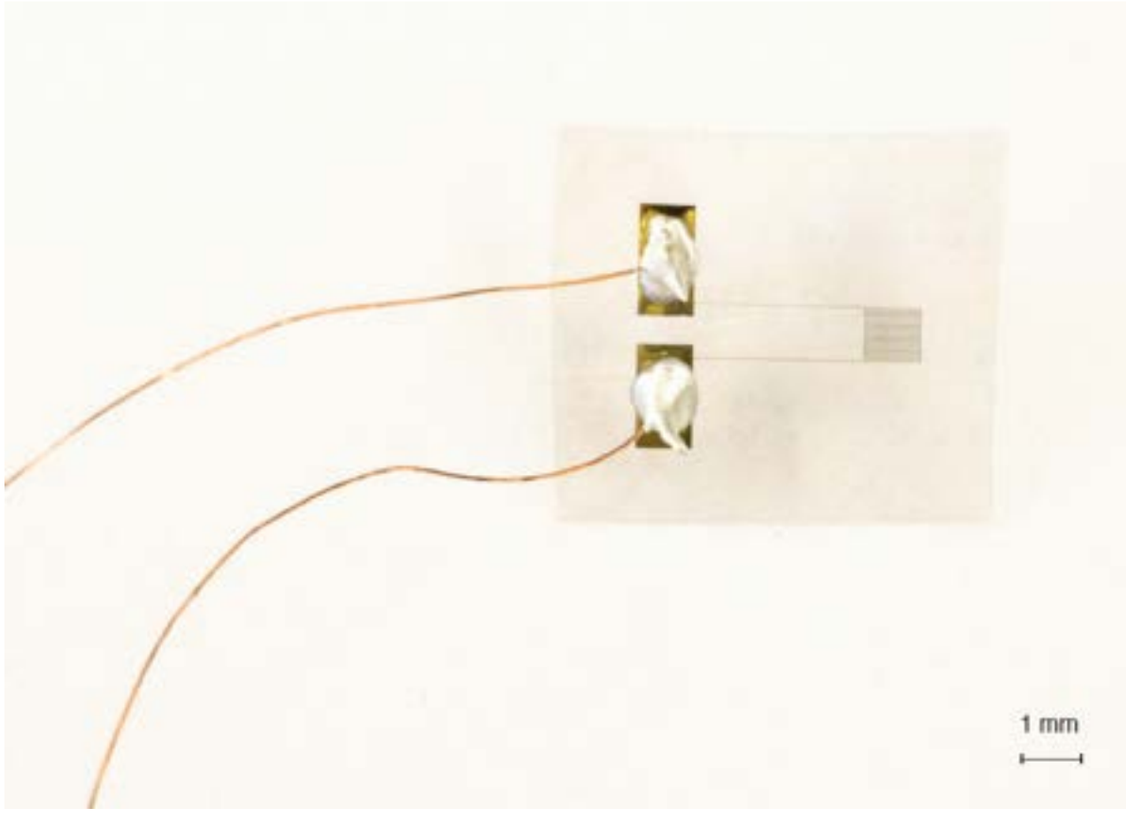

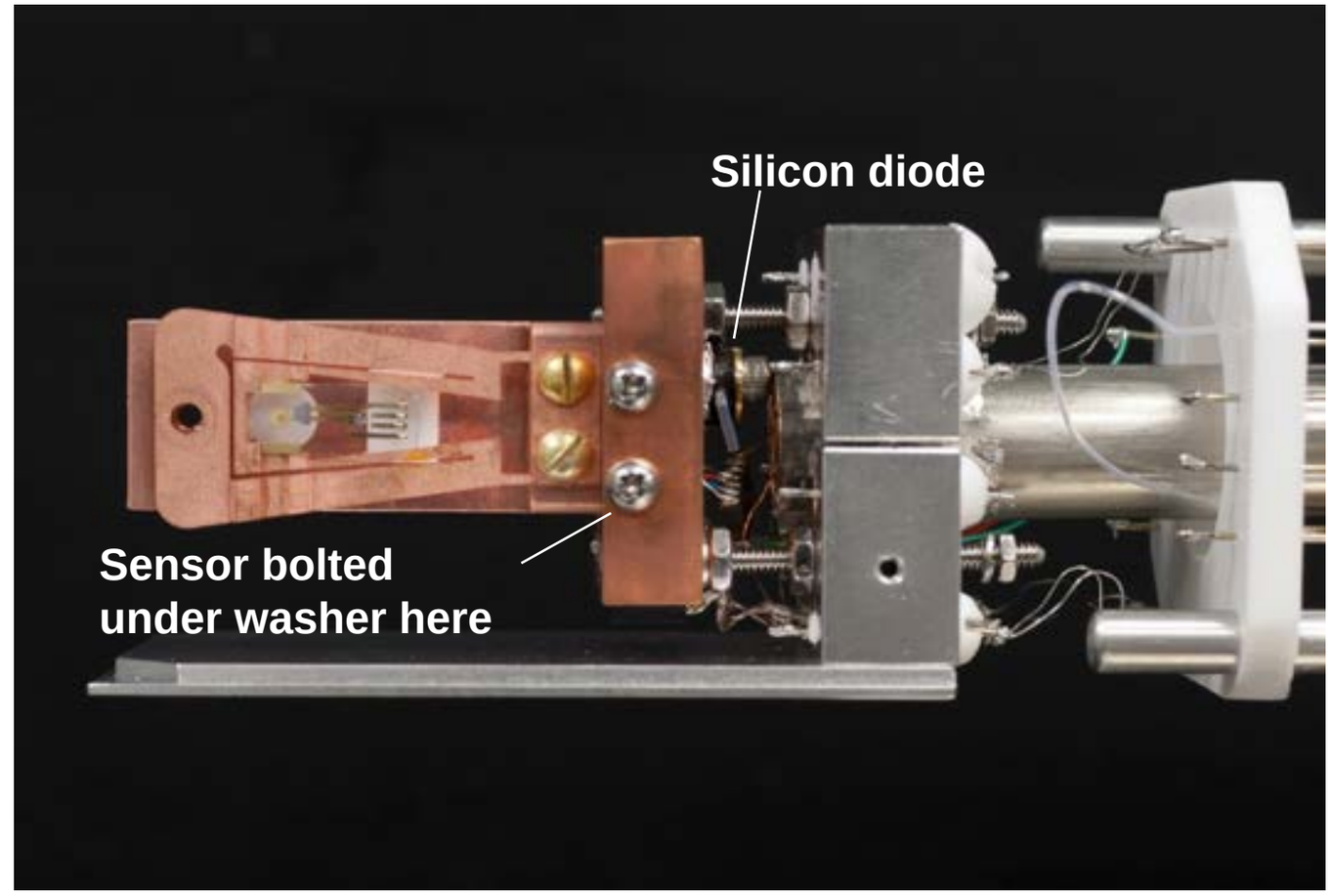

aGe sensor

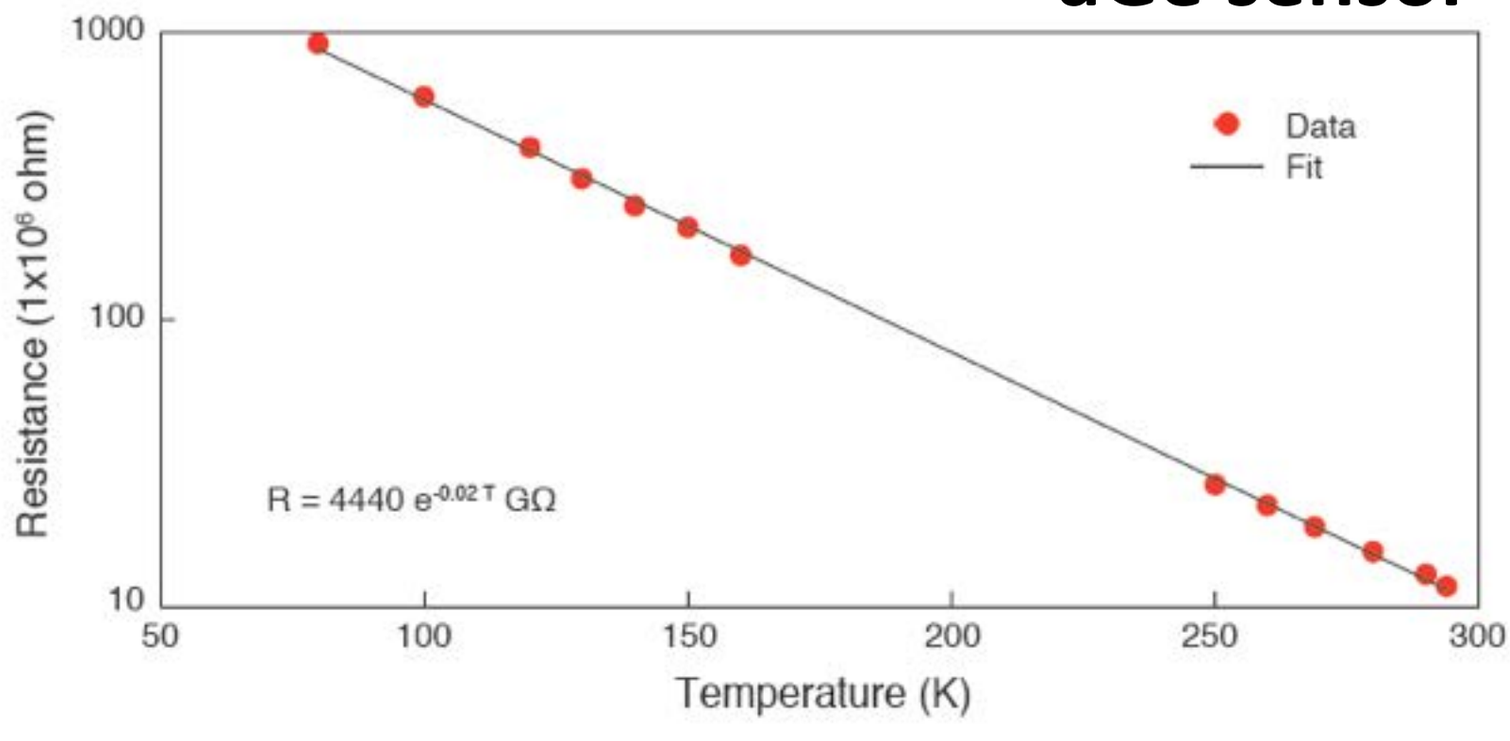

Implementation in low-background experiments

- Circuit components (concepts):

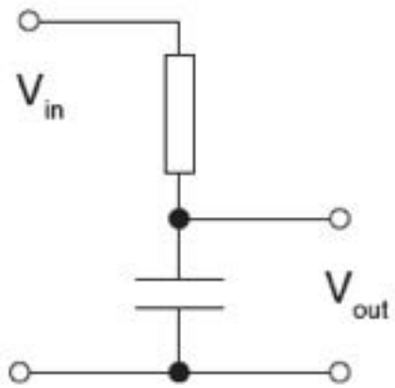

RC filter

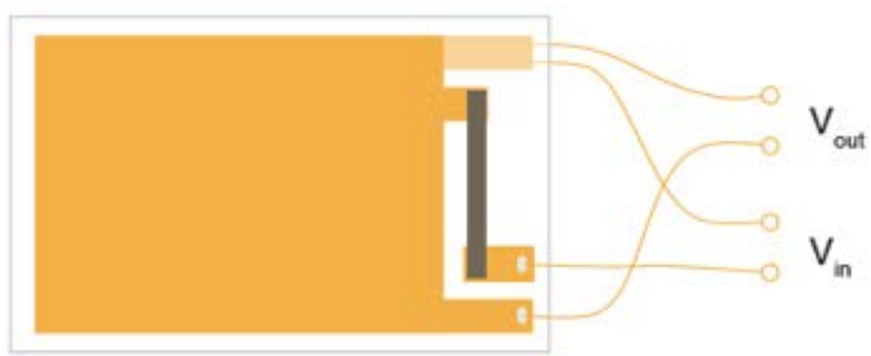

Parallel plate capacitor

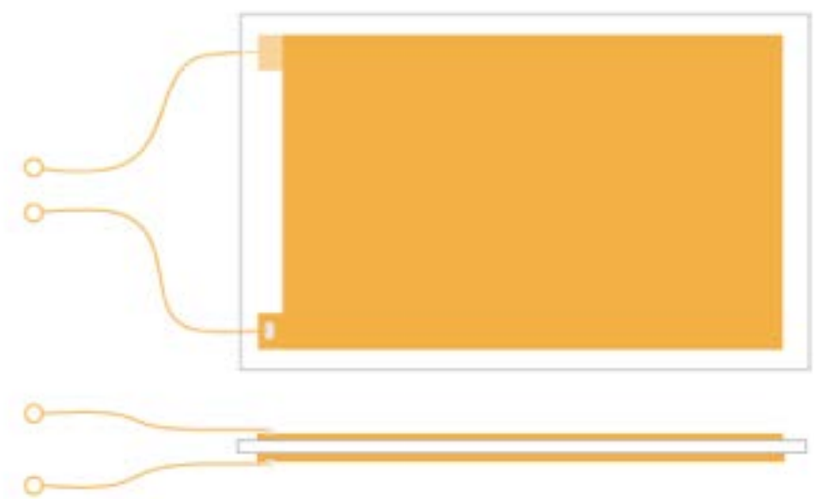

- PCB:
  - parylene backing only
  - parylene on clean conductor substrate (e.g. EFCu) as ground plane or mechanical support
  - some tuning of capacitance may be necessary for low noise applications

What do we need to do? (my opinion)

- “Front-end” electronics
  - custom ASIC
  - control of die radioactivity
  - source clean gold
- Cables and harnesses
  - methods to fabricate thin wires and foils from EFCu cleanly
- Connectors
  - suitable mating form with chosen cables
- PCB
  - contamination tracking
  - clean substrate materials with superior dielectric behavior?

Summary

- The next-generation underground rare-event search experiments demand ultrapure targets, and electronics and associated components.
- Painstaking sourcing and assaying of materials are necessary to meet the stringent radiopurity goals.
- Much efforts have been devoted to designing and testing low-noise, low-background front-end electronics that can be used in both low-energy (DM, coherent neutrino scattering) and “high-energy” (double beta decay) experiments.

The End

Radiopurity

Total sensor mass was ~ 4 mg.

Item	Mass %	Conc. (ppb)		Activity (nBq)	
		Th-232	U-238	Th-232	U-238
		Au sensors			
Copper wire	32.0	< 0.087	< 0.040	< 0.431	< 0.608
Silver epoxy	12.2	< 0.079	< 0.011	< 0.150	< 0.064
Parylene C (sensor)	51.9	0.53(3)	0.25(6)	4.3(0.2)	6.2(1.5)
Parylene C (wires)	1.6	0.53(3)	0.25(6)	0.13(0.01)	0.19(0.05)
Micro-90	~ 0	< 1.5	< 0.6	~ 0	~ 0
Au traces	2.3	47.4(1.1)	2.0(0.4)	17.0(0.4)	2.2(0.4)
Ti traces	~ 0	< 0.4	< 0.1	~ 0	~ 0
Total	100.0			< 21.9	< 9.2
		a-Ge sensors			
Copper wire	32.3	< 0.087	< 0.040	< 0.431	< 0.608
Silver epoxy	12.4	< 0.079	< 0.011	< 0.150	< 0.064
Parylene C (sensor)	52.4	0.53(3)	0.25(6)	4.3(0.2)	6.2(1.5)
Parylene C (wires)	1.6	0.53(3)	0.25(6)	0.13(0.01)	0.19(0.05)
Micro-90	~ 0	< 1.5	< 0.6	~ 0	~ 0
Au traces	1.1	47.4(1.1)	2.0(0.4)	8.0(0.2)	1.0(0.2)
Ti traces	~ 0	< 0.4	< 0.1	~ 0	~ 0
Ge traces	0.2	2.4(0.7)	1.7(0.4)	0.08(0.02)	0.17(0.04)
Total	100.0			< 13.1	< 8.2