PCGe Detector Fabrication in China

Yulan Li
Tsinghua University/CDEX collaboration

2015 Symposium of the Sino-German GDT Cooperation
@ Ringberg castle, Oct. 18-24,2015

CJPL 中国锦屏地下实验室 China Jinping Underground Laboratory

Outline

- Recent progress in detector fabrication
- The design of CDEX-10X detector module
- Summary & outlook

CJPL

Ge and Point-Contact

Pictures taken at Deutsches Museum on Oct. 18th, 2015

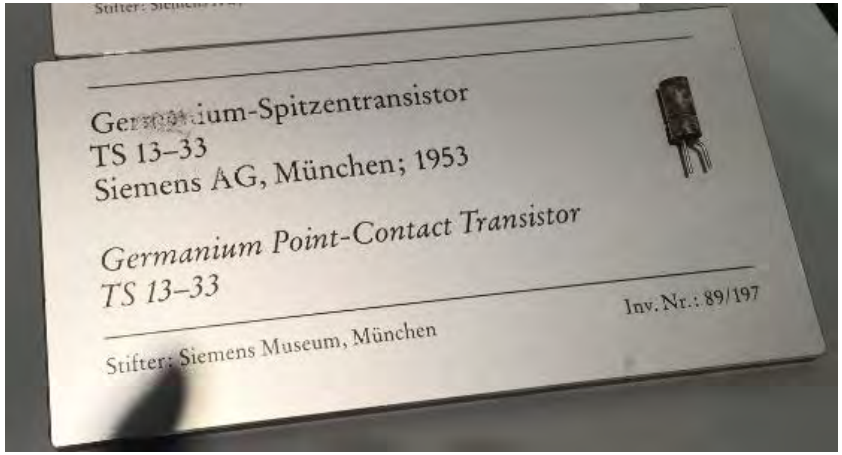

Ge Point-Contact Transistor

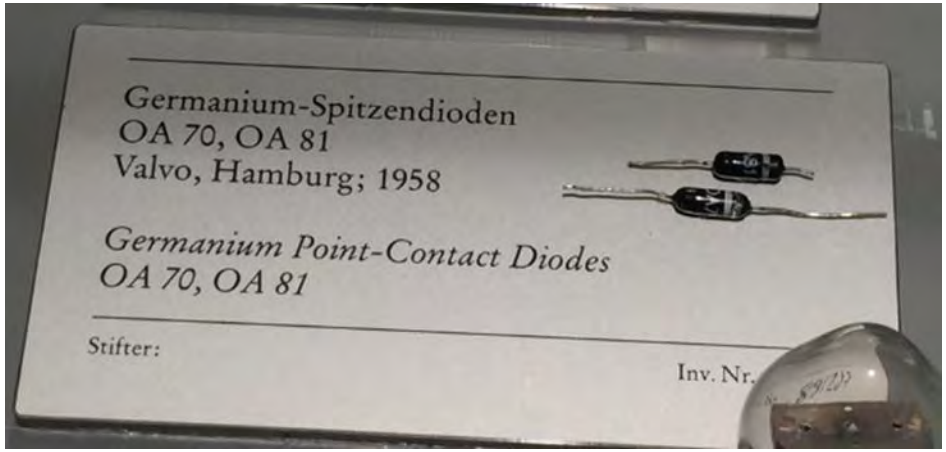

Ge Point-Contact Diodes

PCGe detector

- **Late 1980s**
- **Large volume**
- **Low noise**

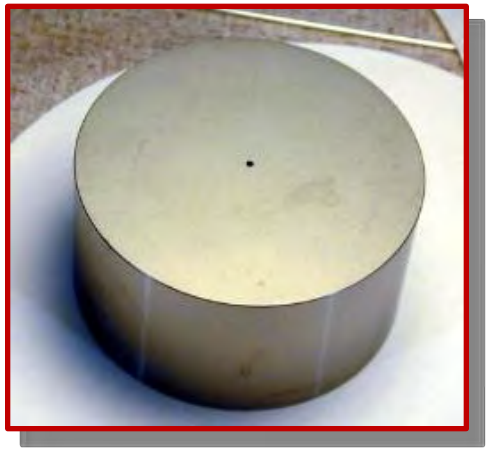

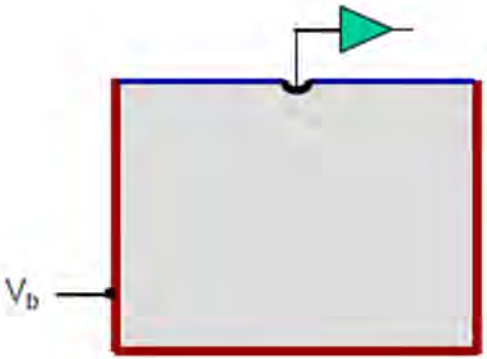

CJPL

Facilities @ THU for PCGe Detector

- Clean room

- Chemical Lab

- Mechanical workshop

- Test corner

Crystals Processed

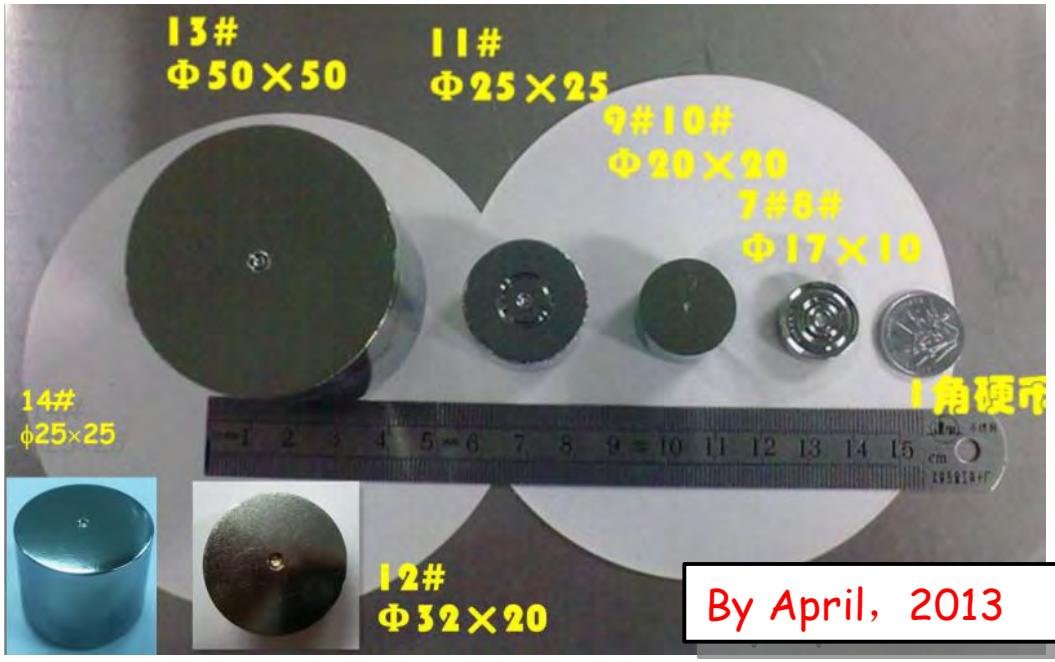

By April，2013

New members recently:

- PCGes:
  - 15#, 16#: ø 25mm×25mm (~65g)
  - 18#, 19#: ø 50mm×50mm (~500g)
    - Good performance
    - Will be used in CDEX-10X
- BEGe:
  - 21#: ø 50mm×30mm

New surface treatment method and electrode configuration developed:

- Good performance: low leakage current, good long-term stability
- Easy to handle and assemble

CJPL

Progress in PCGe detector fabrication(1)

- PCGe Detector-11# (ø25mm)
  - New surface treatment method
    - Chemical etching

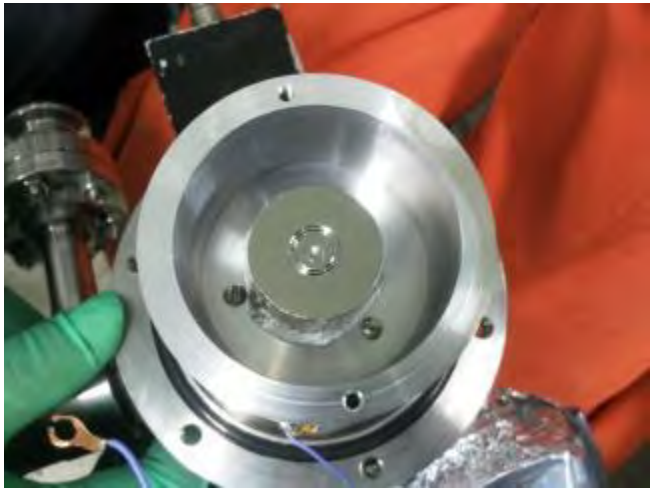

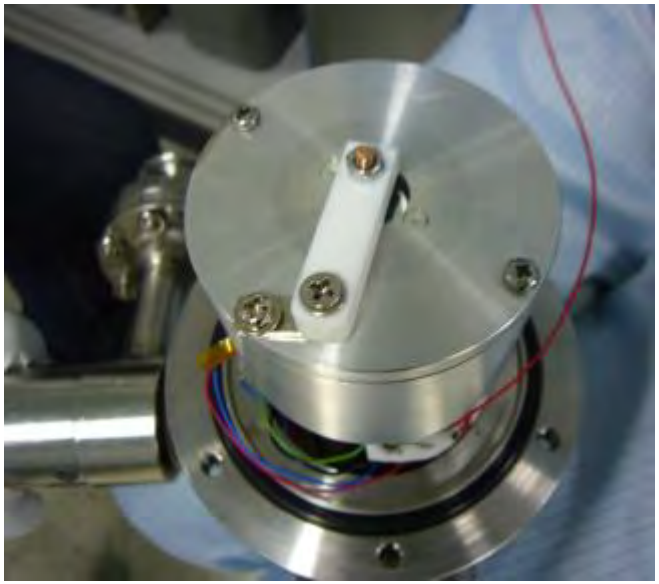

	Leakage Current										Energy Resolution(%)	
Before	Bias(V)	100	200	300	400	500	600	700	800		@Cs-137	@Am-241
	I_l (pA)	30	29	104	266	479	1277	6391	22313		0.273	1.69
After	**Bias(V)**	**100**	**200**	**300**	**400**	**450**	**500**	**510**	**520**	**530**	**@Cs-137**	**@Am-241**
	I_l (pA)	**6**	**7**	**8**	**10**	**10**	**10**	**11**	**766**	**5591**	**0.198**	**1.08**

CJPL

Progress in PCGe detector fabrication

- PCGe Detector-19# (ø50mm)
  - New surface treatment method
  - New electrode configuration

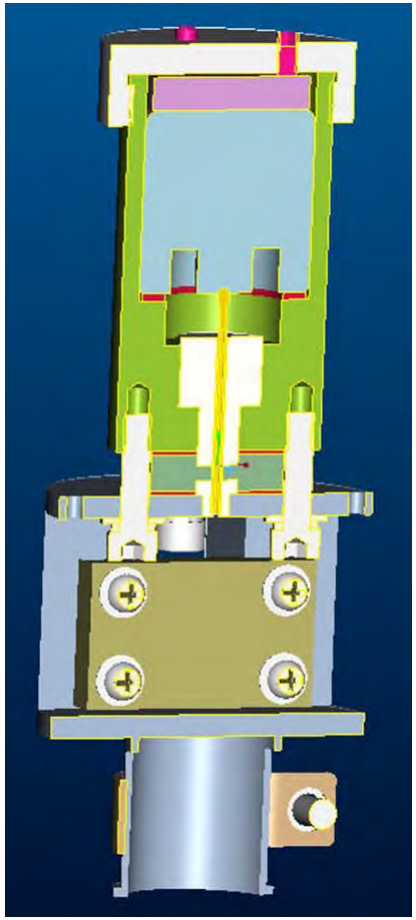

- Very good performance:

Bias (V)	800	900	1000	1100	1200
Leakage Current (pA)	1	3	6	7	13
Bias (V)	1300	1400	1500	1600	1700
Leakage Current (pA)	19	39	97	188	922

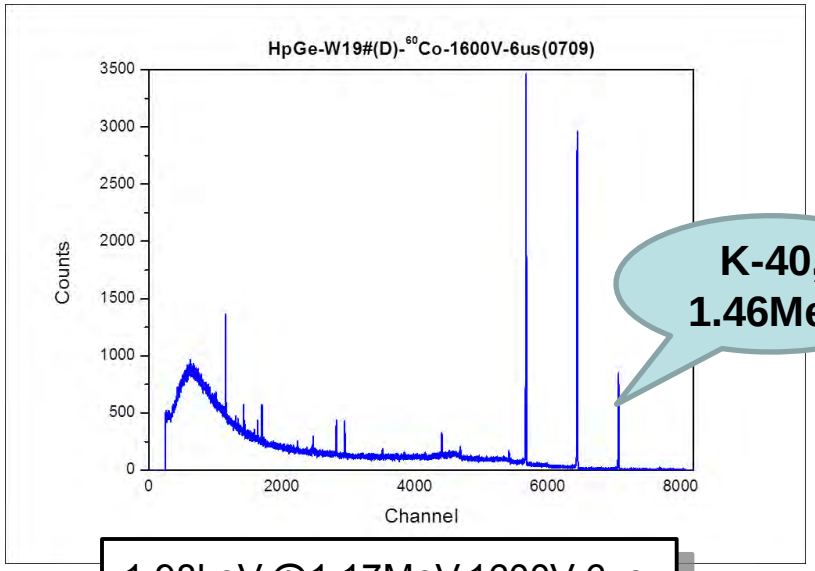

1.98keV @1.17MeV,1600V-6us
2.12keV @1.33MeV,1600V-6us

19# Detector: Thermal Cycle Test

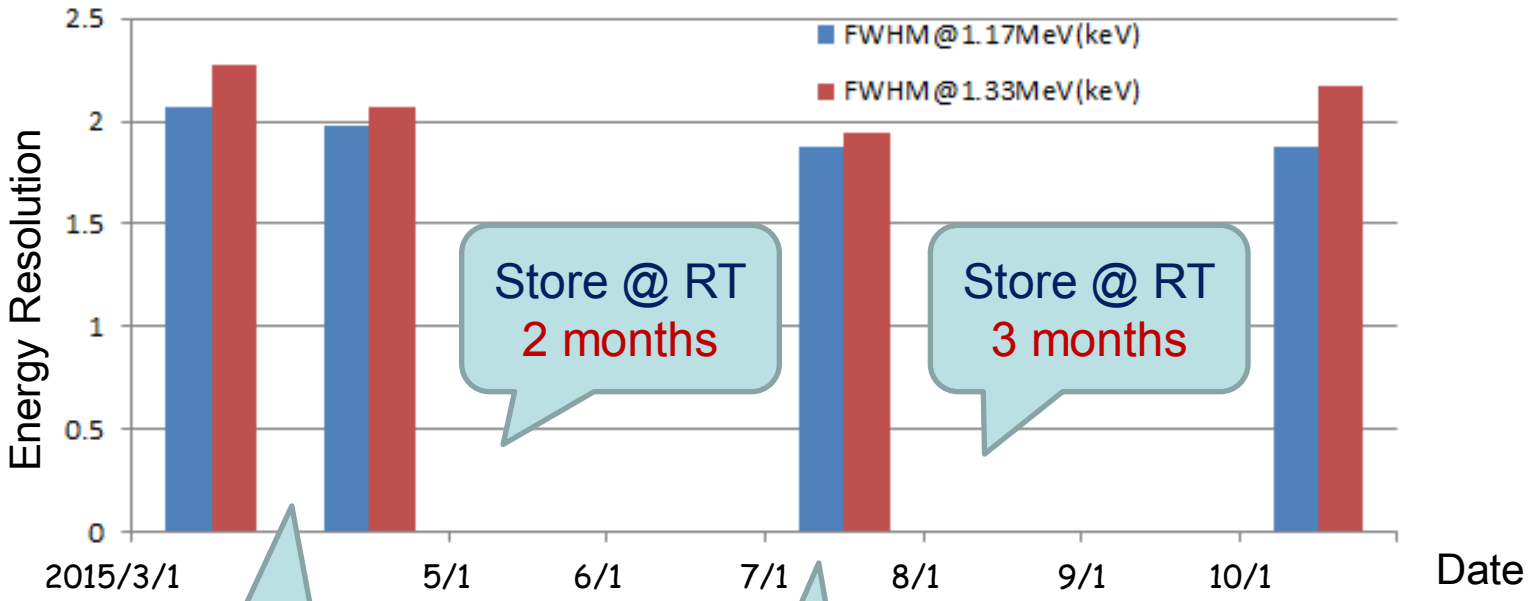

Store @ RT
2 months

Store @ RT
3 months

Store @ RT
1 month

Note：the most hot and humid season in Beijing

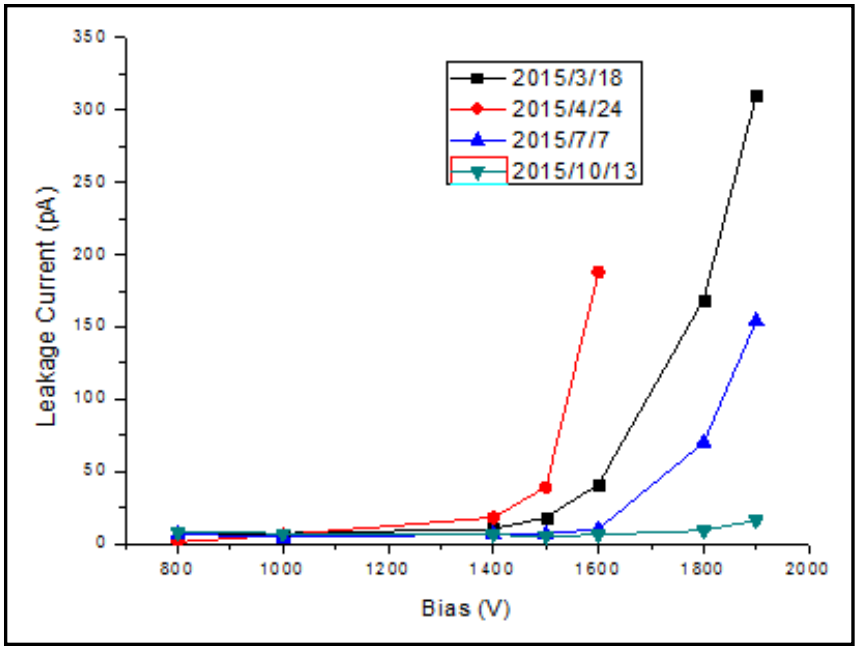

CJPL

21#, 1th BEGe detector

- **Crystal size: ϕ50 mm × 30mm**

•Am-241:

•0.85KeV@59KeV,2000V-6us

•Cs-137:

•1.41KeV@662KeV,2000V-6us

•Co-60:

•1.89KeV@1.17MeV,2000V-6us

•1.9KeV@1.33MeV,2000V-6us

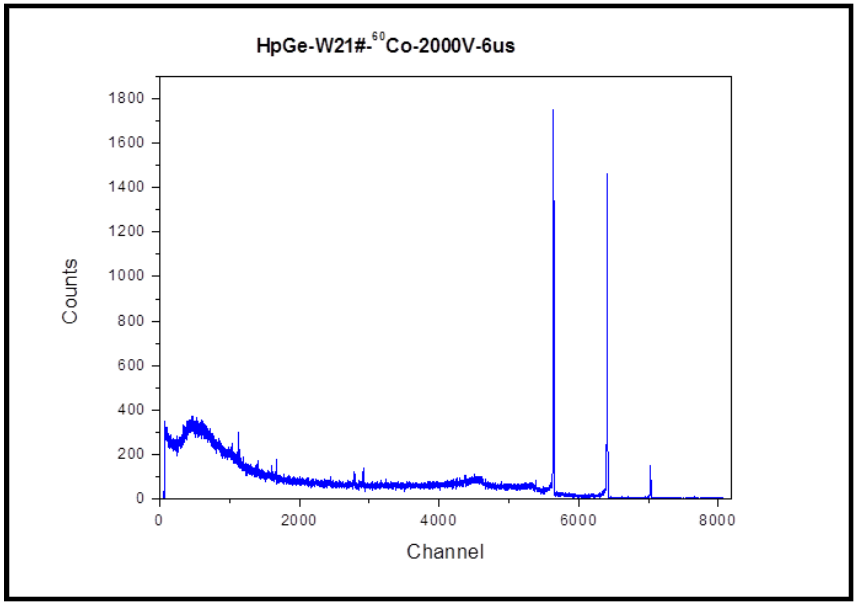

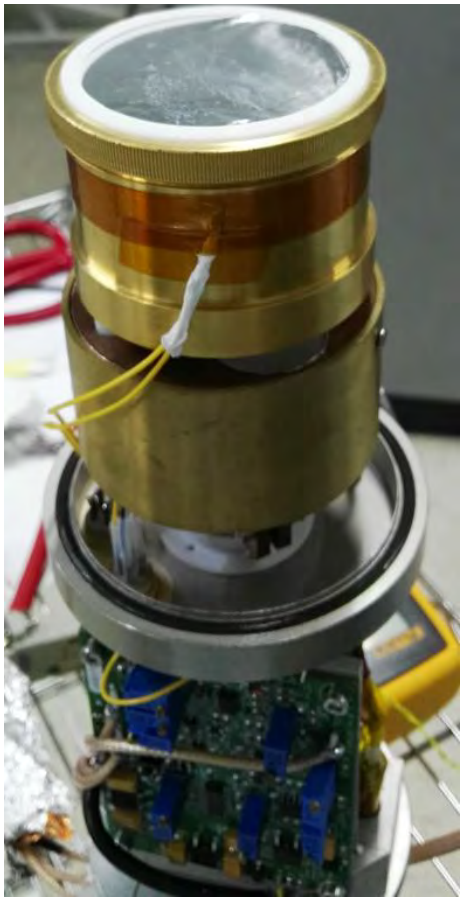

CDEX's plan

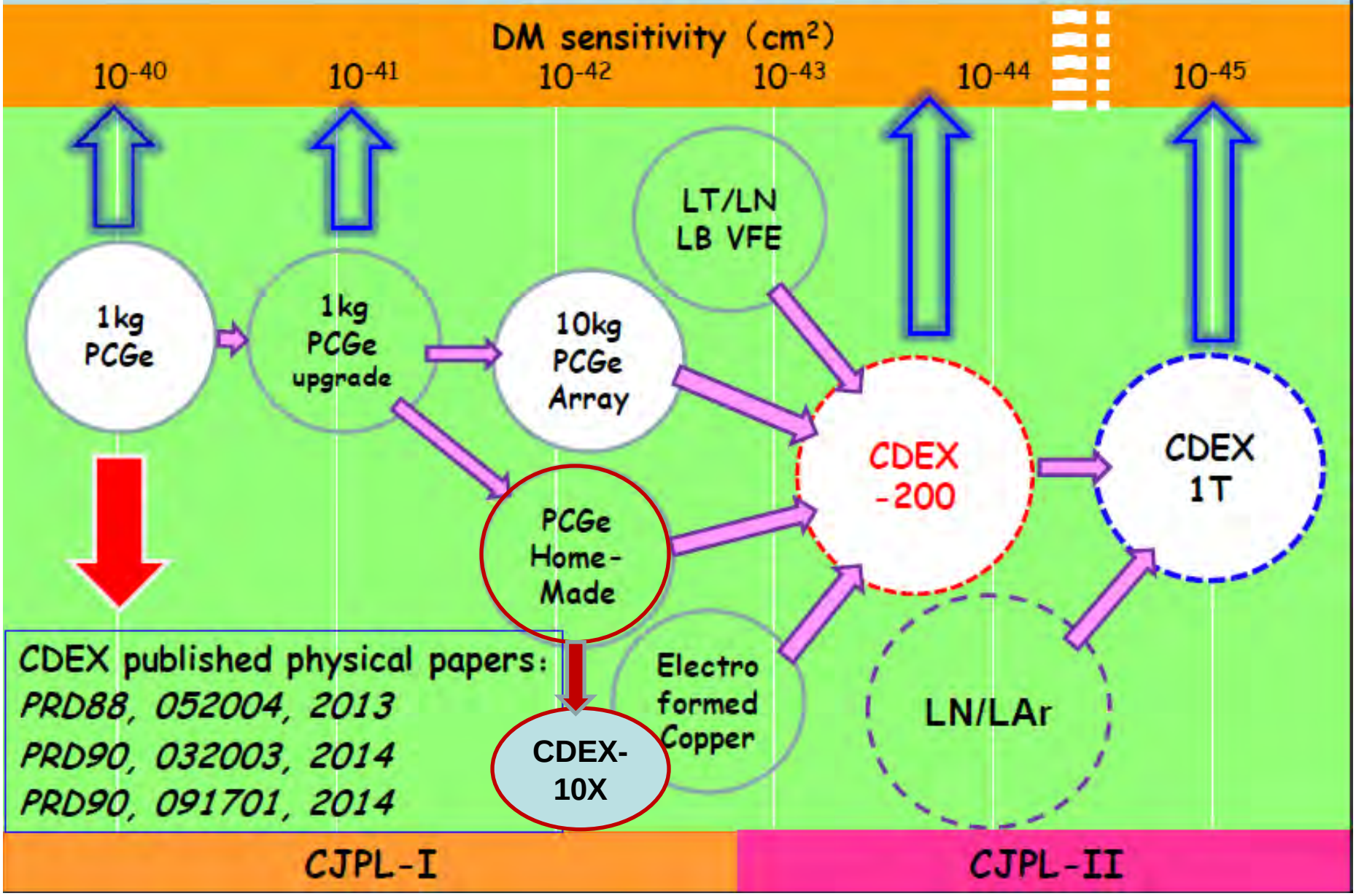

CDEX published physical papers:

PRD88, 052004, 2013

PRD90, 032003, 2014

PRD90, 091701, 2014

CDEX-10X

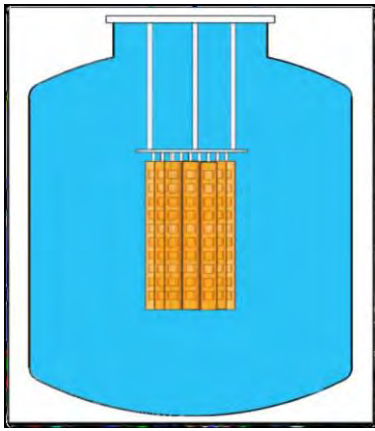

- Motivation:
  - pre-R&D for CDEX-200
  - Try to understand the key technology, especially low background
- Features:
  - PCGe detector
  - Crystals (string) sealed in a vacuum tube , then dip into LN2
- Challenges: mass & low threshold
  - Detector: X=its mass
  - Front-end electronics
    - JFET based
    - ASIC
  - Structure, low radioactive background material
  - …

CJPL

CDEX-10X design: Roadmap (1)

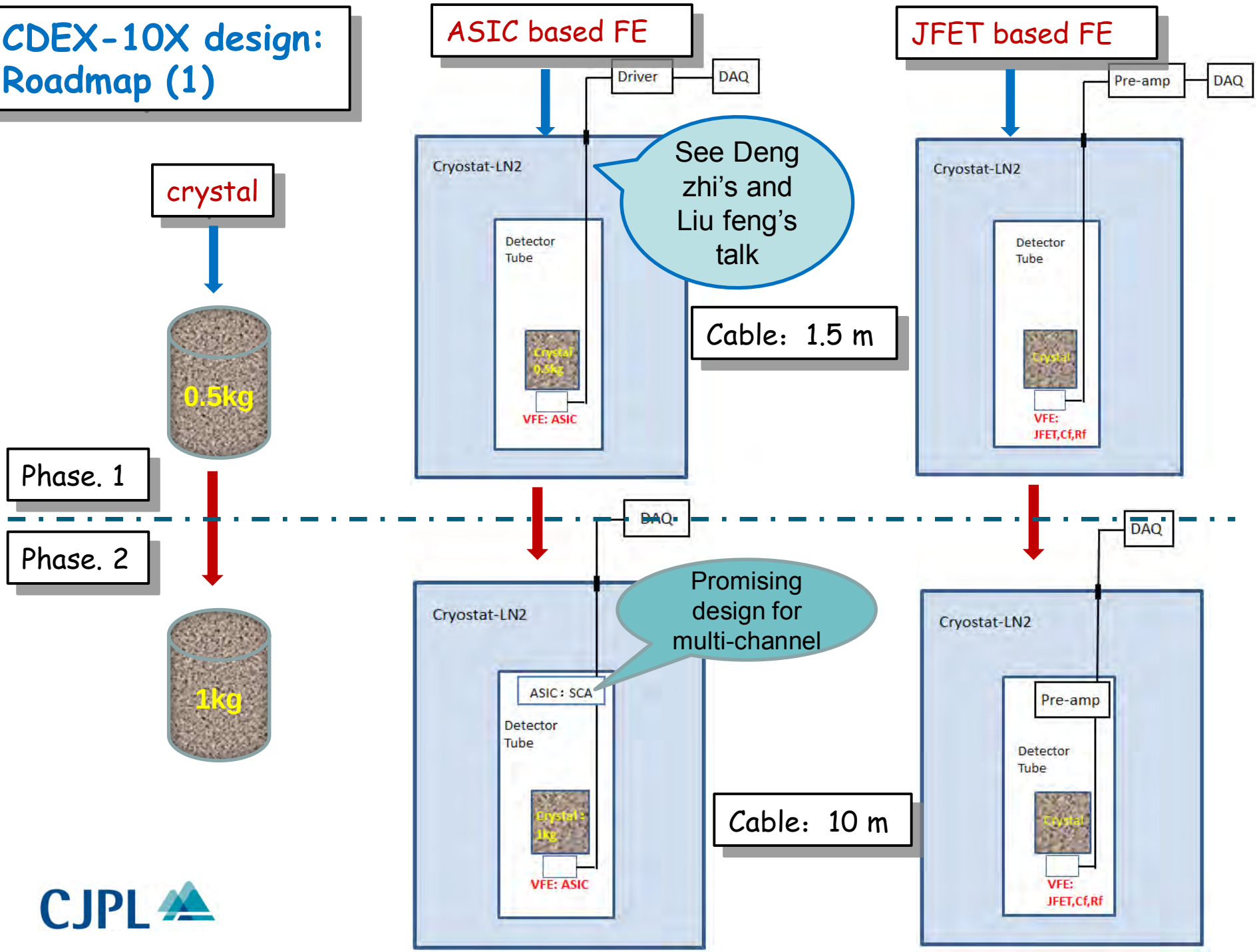

CJPL

CDEX-10X design: Roadmap (2)

Low Background Control:

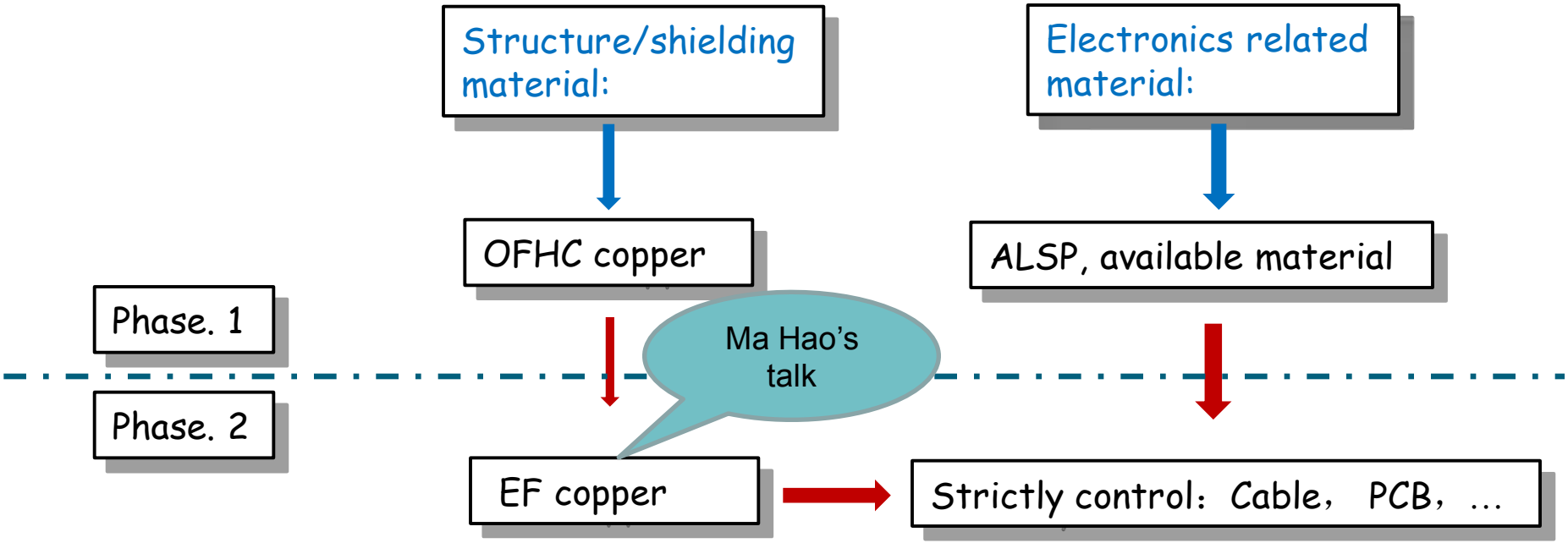

- Phase1： focus on functional test
- Phase2: focus on performance:
  - Simulation study and material screening is essential

CDEX-10X design: mechanical (1)

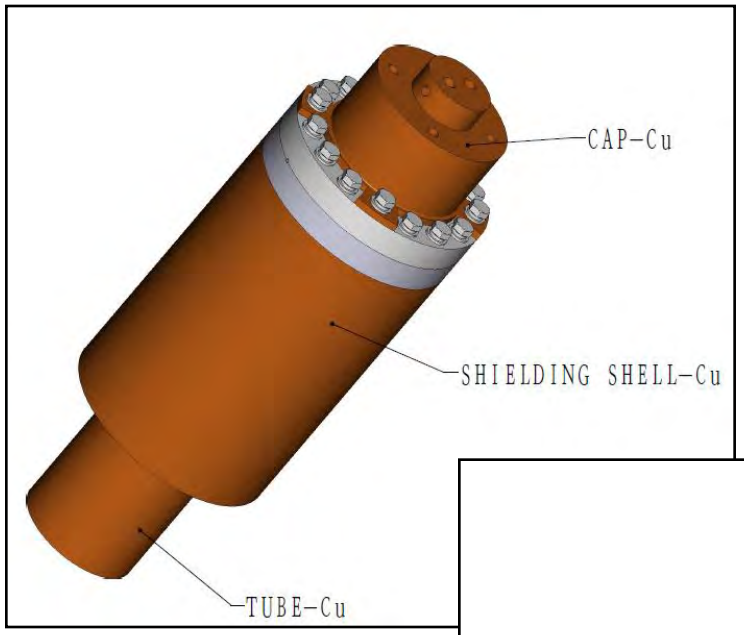

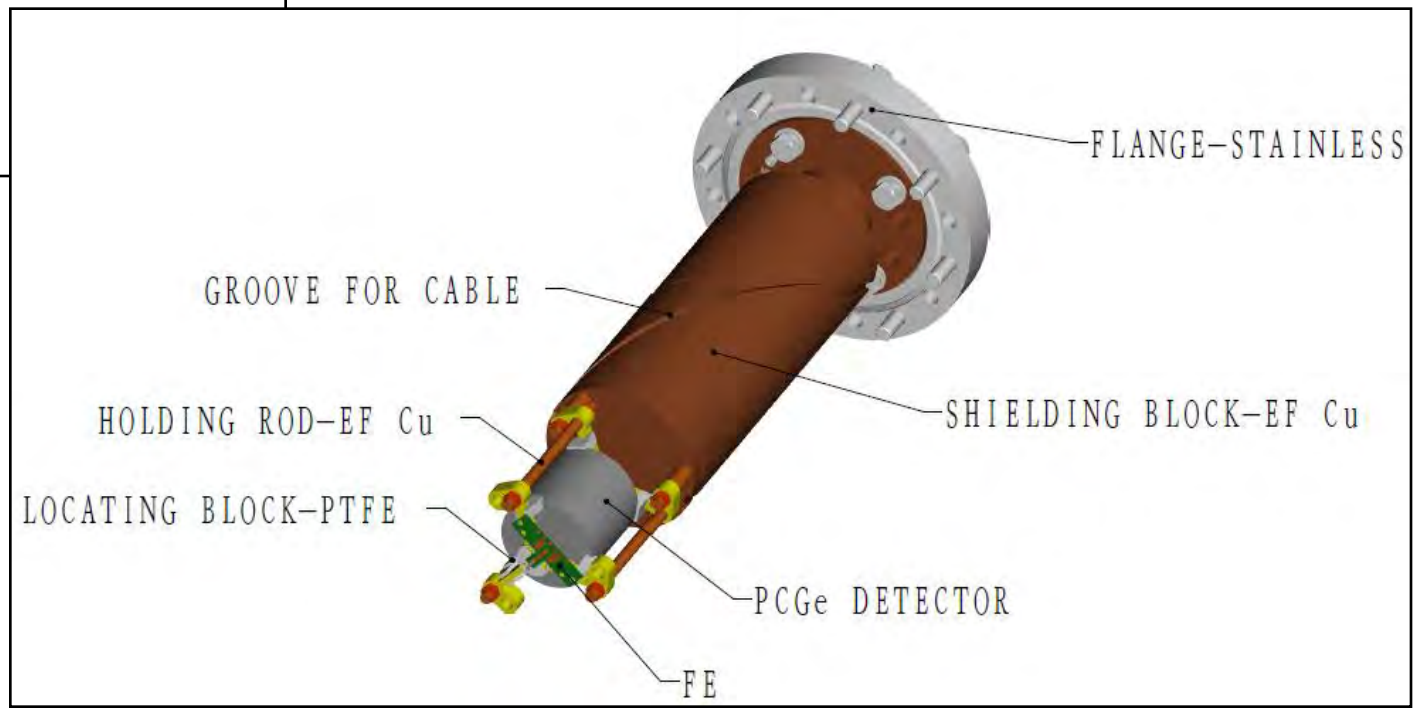

CJPL

CDEX-10X design: mechanical (2)

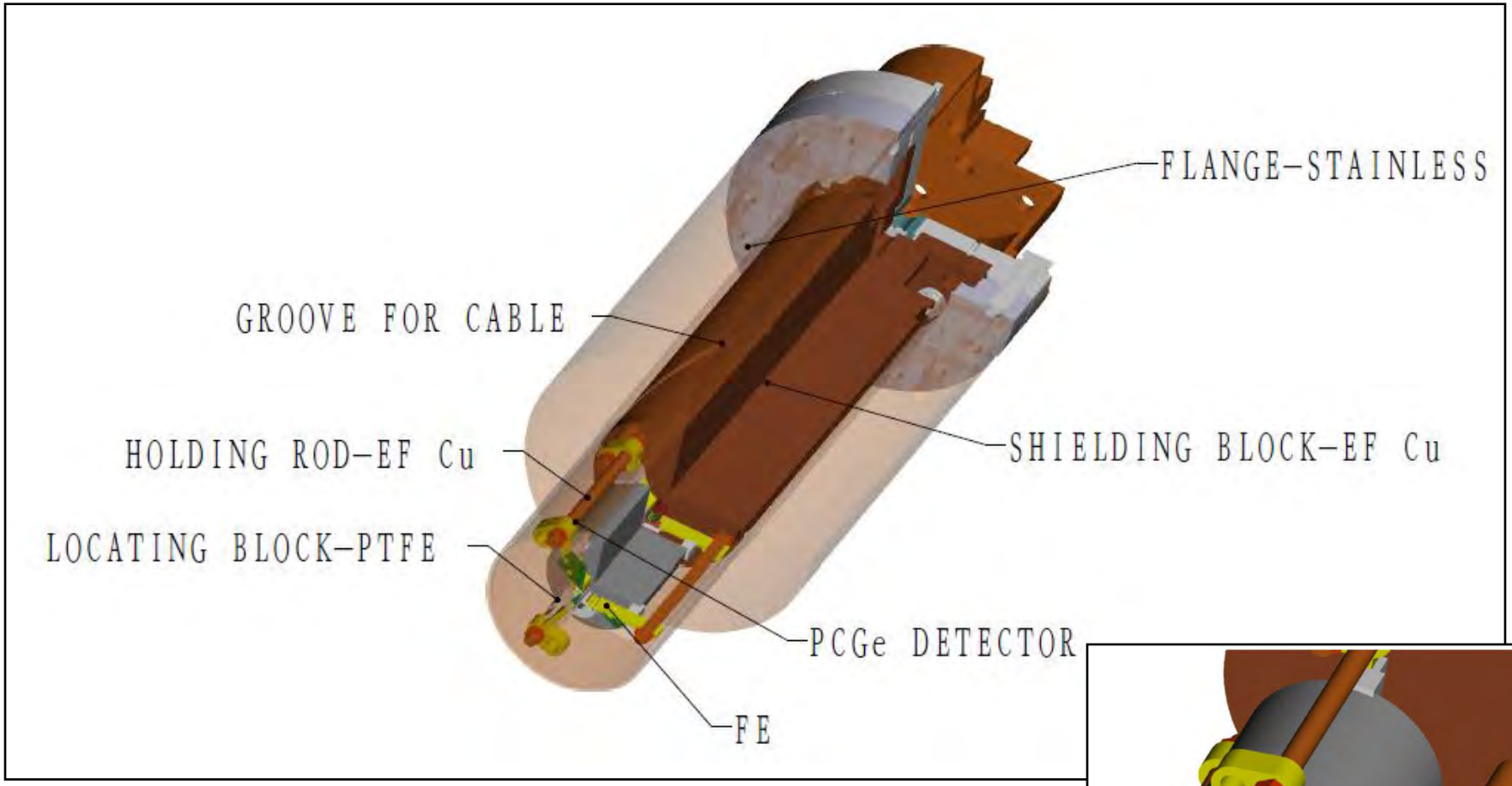

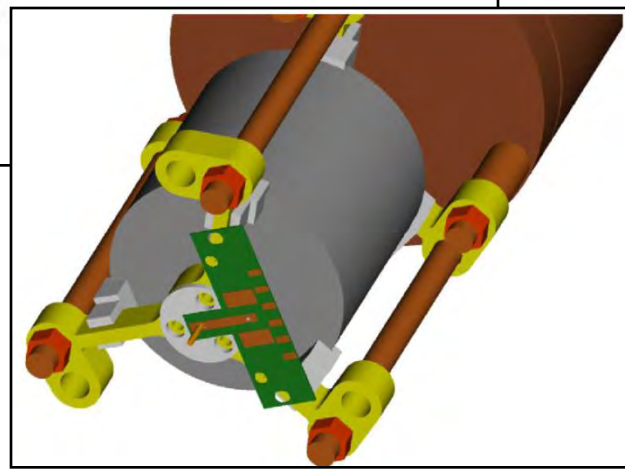

CJPL

CDEX-10X design: Thermal Simulation Analysis （1）

- Different heat source：

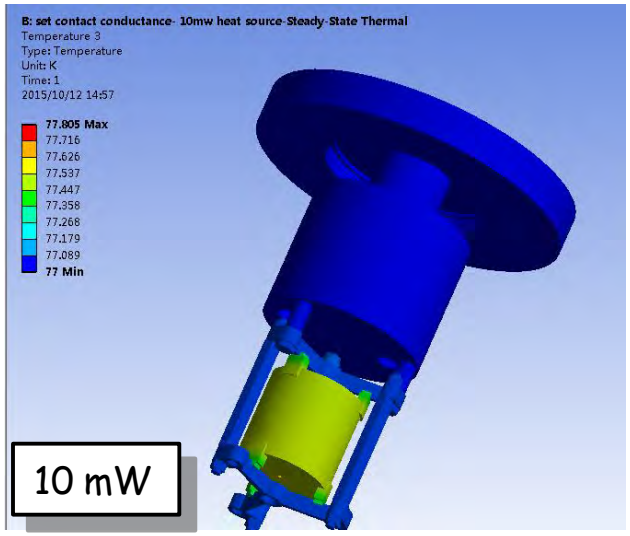

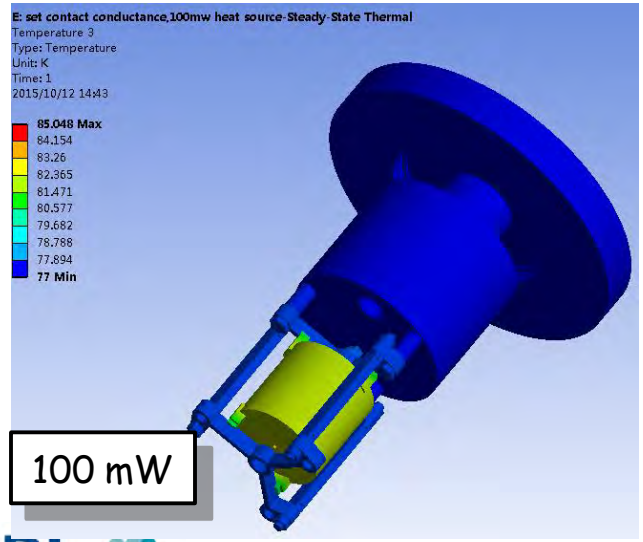

- Different thermal conductance

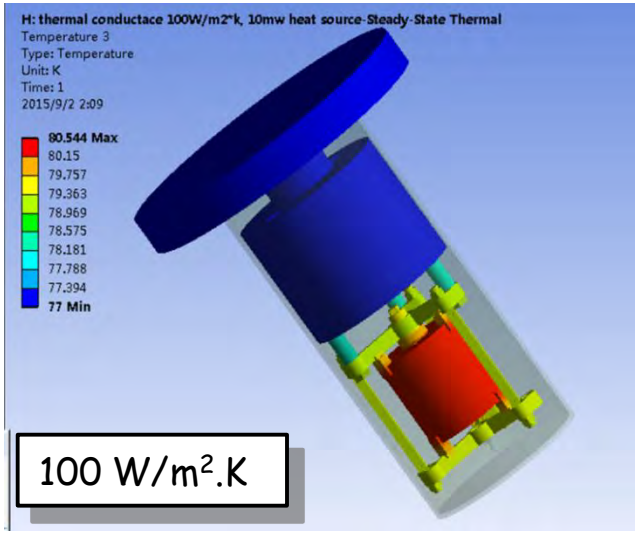

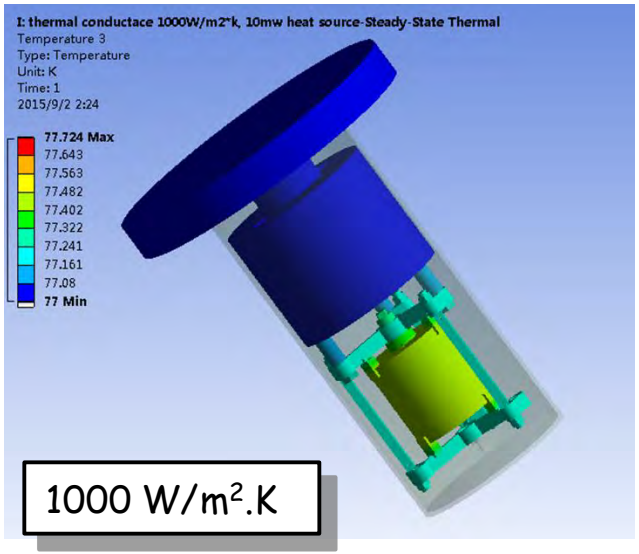

CJPL

CDEX-10X design: Thermal Simulation Analysis （2）

- w/o Al_2O_3:

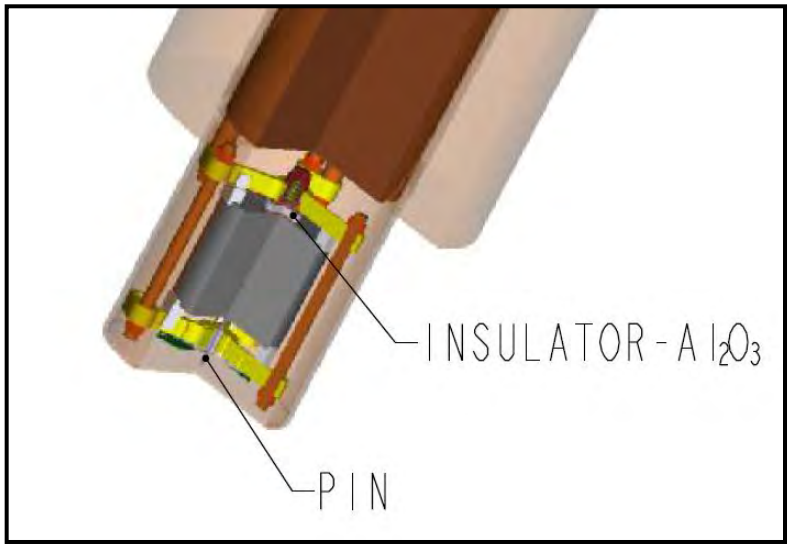

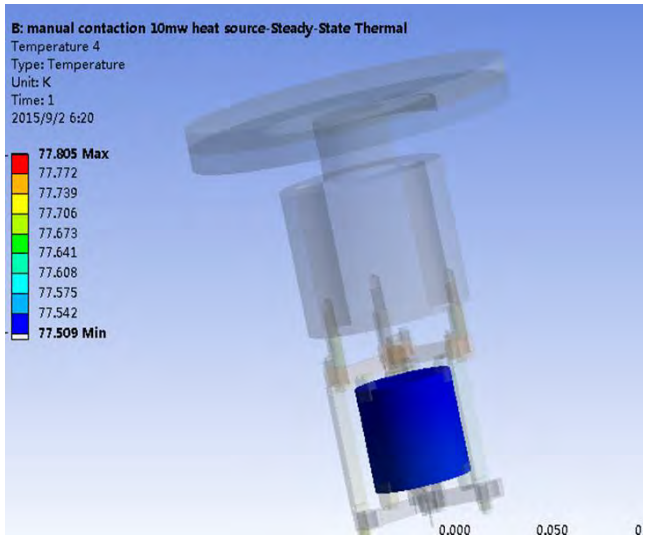

W, 77.5K

w/o, 79.5K

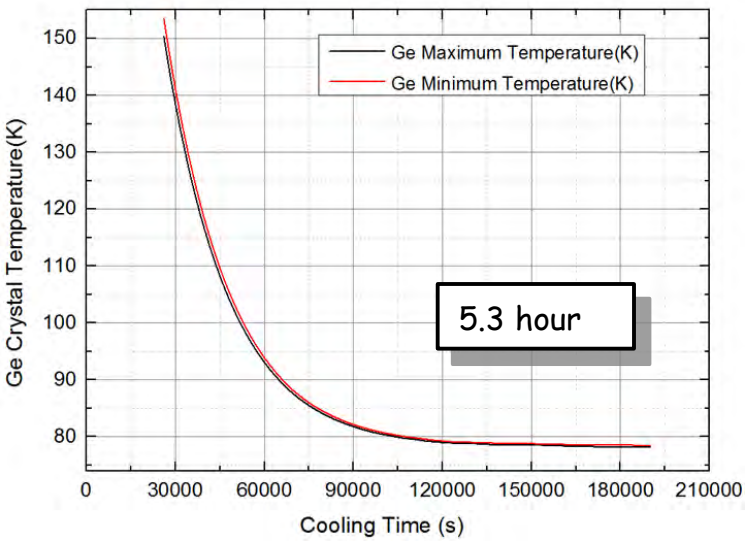

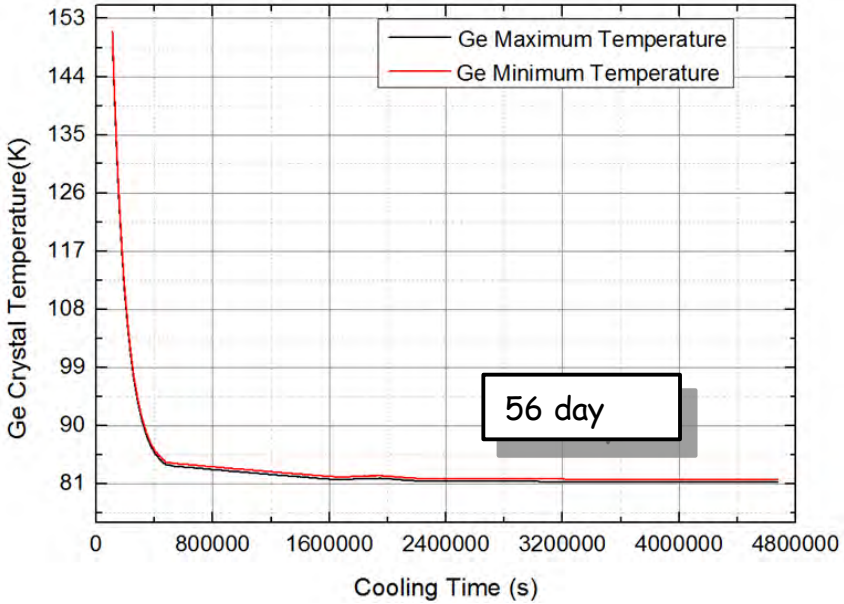

CDEX-10X design: Thermal Simulation Analysis （4）

Heat Source	Temperature distribution @ JFET	Temperature distribution @ PCB
5 mW	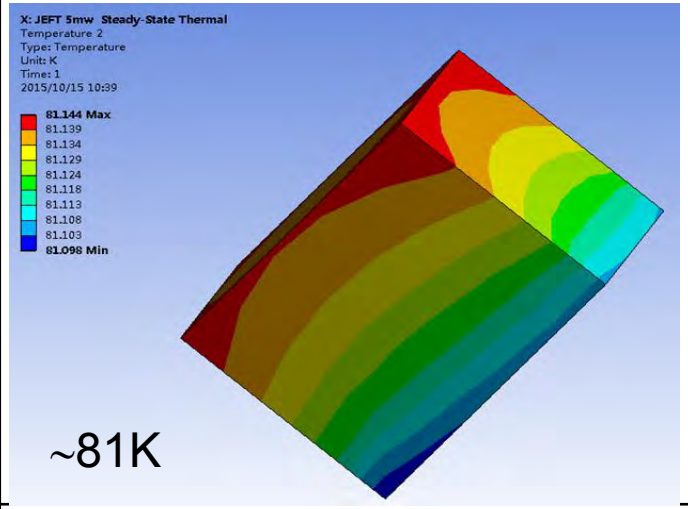	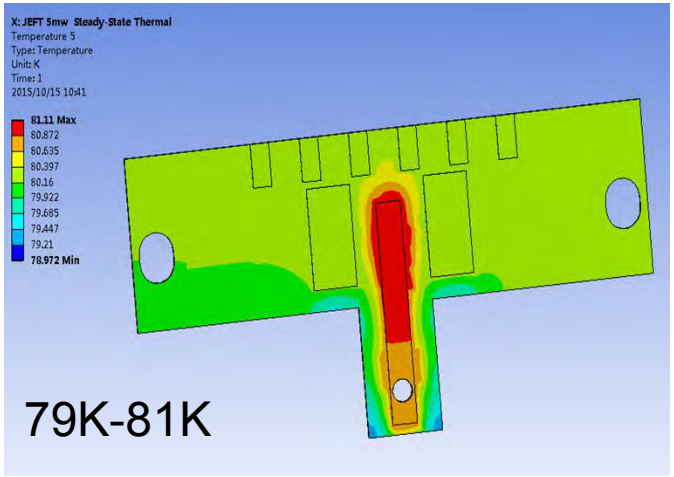
10 mW	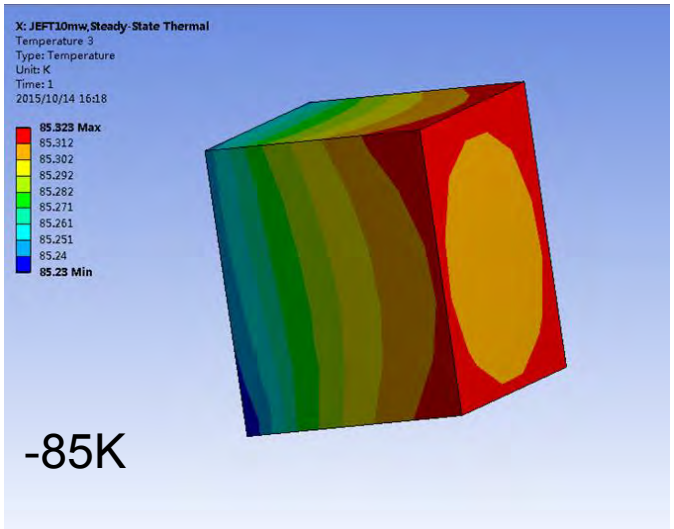	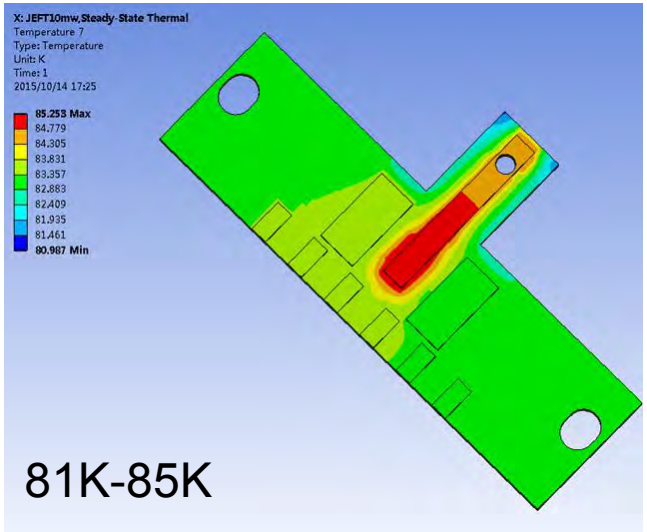

CDEX-10X design: Thermal Simulation Analysis （5）

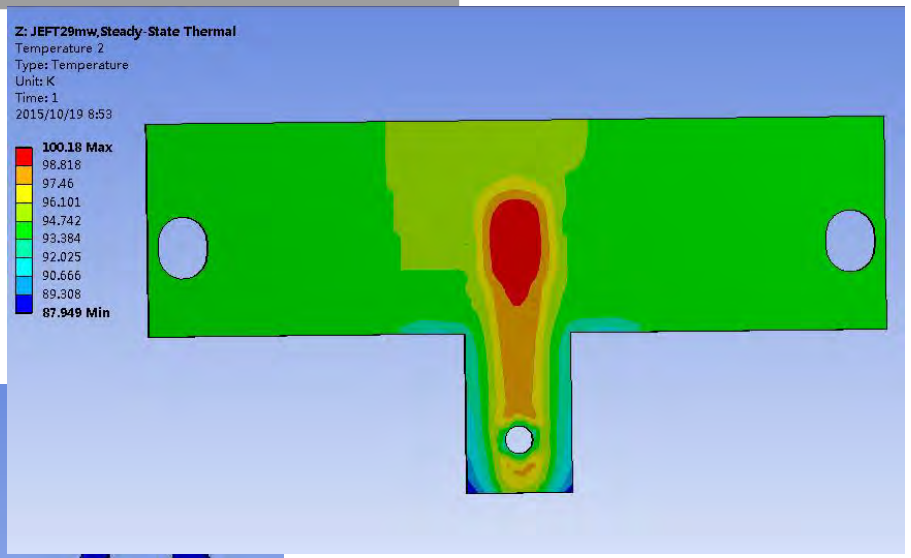

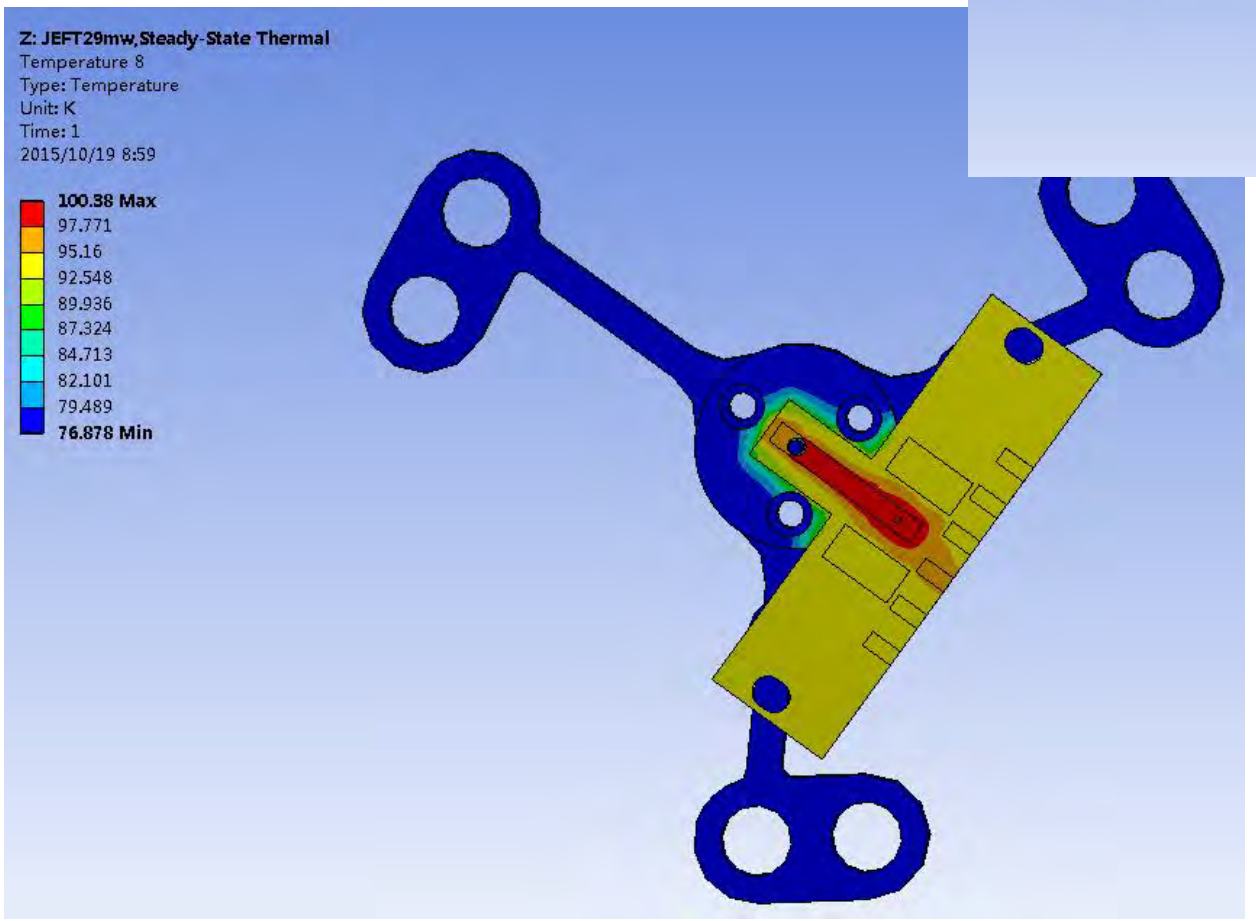

29mW is needed for JFET to be heated to 100k

Summary & Outlook

- Progress have been achieved in HPGe detector fabrication;
  - New surface treatment method
  - New electrode configuration and assembling method
- For CDEX-10X：
  - The design is finished;
  - All the sub-systems and components are under processing and debugging;
  - The assembling and test will begin from the coming December.
- X=? Hopefully:
  - X=2 × 0.5,
    - By the mid of 2016, functional test finished
    - By the end of 2016, performance test finished
  - X=1, by the end of 2017

CJPL