Status and Plans for Optical Interface Integration

Yunpeng Bai

Physik Department E18 - Technische Universität München

20th International Workshop on DEPFET Detectors and Applocations
11-14 May, 2016
Kloster Seeon

supported by:
Heinz Maier-Leibnitz Zentrum
Cluster of Excellence: Origin and Structure of the Universe,
BMBF

Outline

Technische Universität München

Optical Interface

Summary & Outlook

Glenair Optical Transmitter

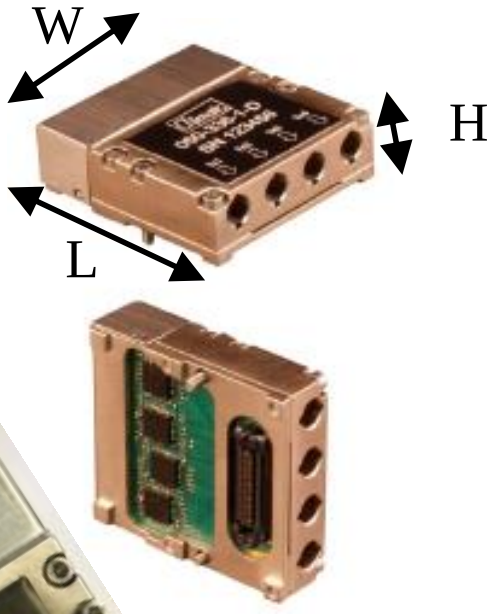

1. Glenair Quad Fiber Optical Transmitter

- Supply Voltage & Current: 3.3V & 360mA,
- 850nm light source
- Up to 5Gbps
- Size L27.9 x W25.4 x H9.1 (mm)

2. Order

- Received 2 samples at March
  → SN000001, SN000002
- 20 pieces ordered by LMU
  → will arrive at the end of May
- 25 more need to be ordered
  → By TUM ASAP

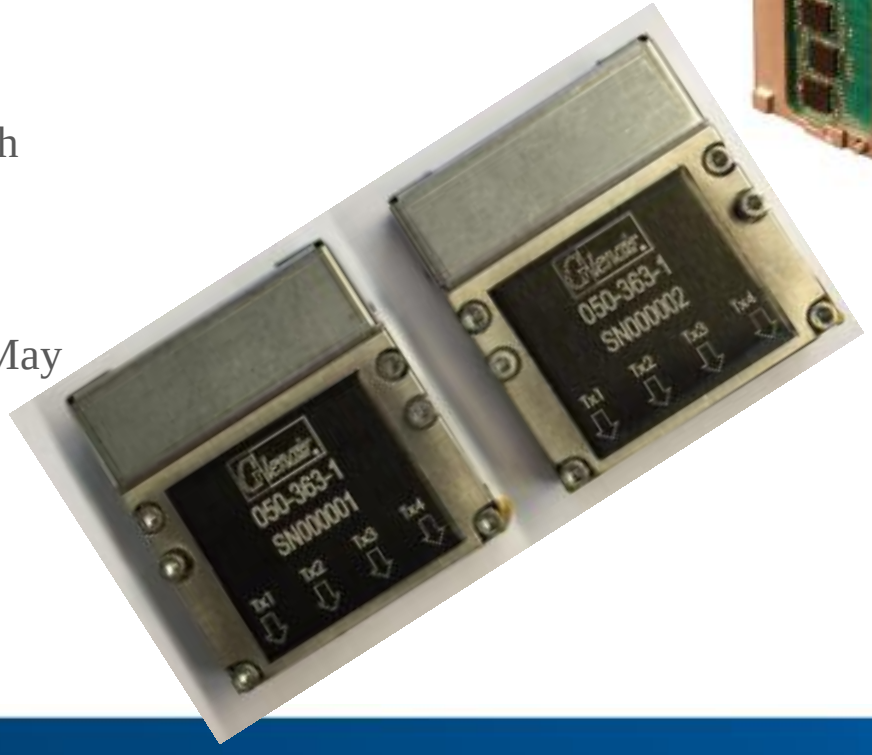

Control Signals

1. Control signals between DHE and Detector
   - DHPT control, JTAG, DCD Current Source: In total 16 signals
   - 2xRJ45 was proposed

But ⇩

→ Easy to connect wrongly
→ Very bulky
→ Another Connector needed to deliver 3.3V power for the optical transmitter

Therefore…

Display Port ⇨

Display Port & Cable

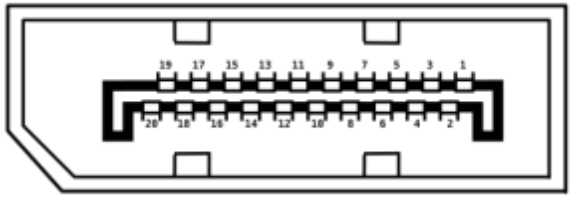

Specifications

- 20 Pins in total
- Diameters 7 – 10 mm
- Defined for high speed signals

DisplayPort Cable Mechanical Specifications

Cross Section

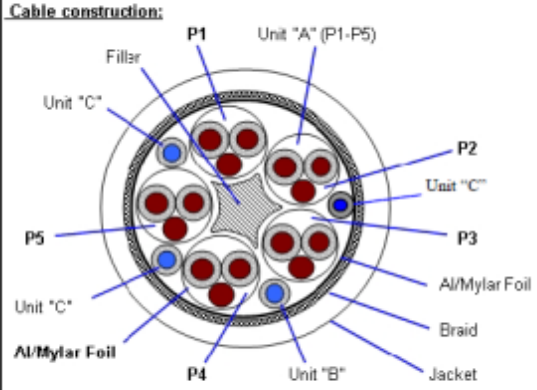

Description

Rated Voltage (V)	30V DC
Rated Temperature (℃)	80 ℃
Product Standard Certification	
Flammability Test	VW-1
Tinned copper wire braiding shield	
PVC jacket	
Dielectric Withstanding Volts	300V AC

Mechanical Characteristics

Test Object	Jacket
Test Material	PVC
Before Tensile Strength (kg/mm2)	≧ 1.05
Aging Elongation (%)	≧ 100
Aging Condition	113±2℃ X 168 hrs
After	≧ 70% of original
Aging	≧ 65% of original
PVC JACKET: NON-MIGRATION (PS)	

Marking

DisplayPort™ Cable Exxxxx-x AWM STYLE 20276 80℃ 30V VW-1 **(Vendor Logo)**

50 mm ± 5

Display Port

Pin Assignment

- 20 Pins in total
- Pin 20 are not connected in a standard display port cable

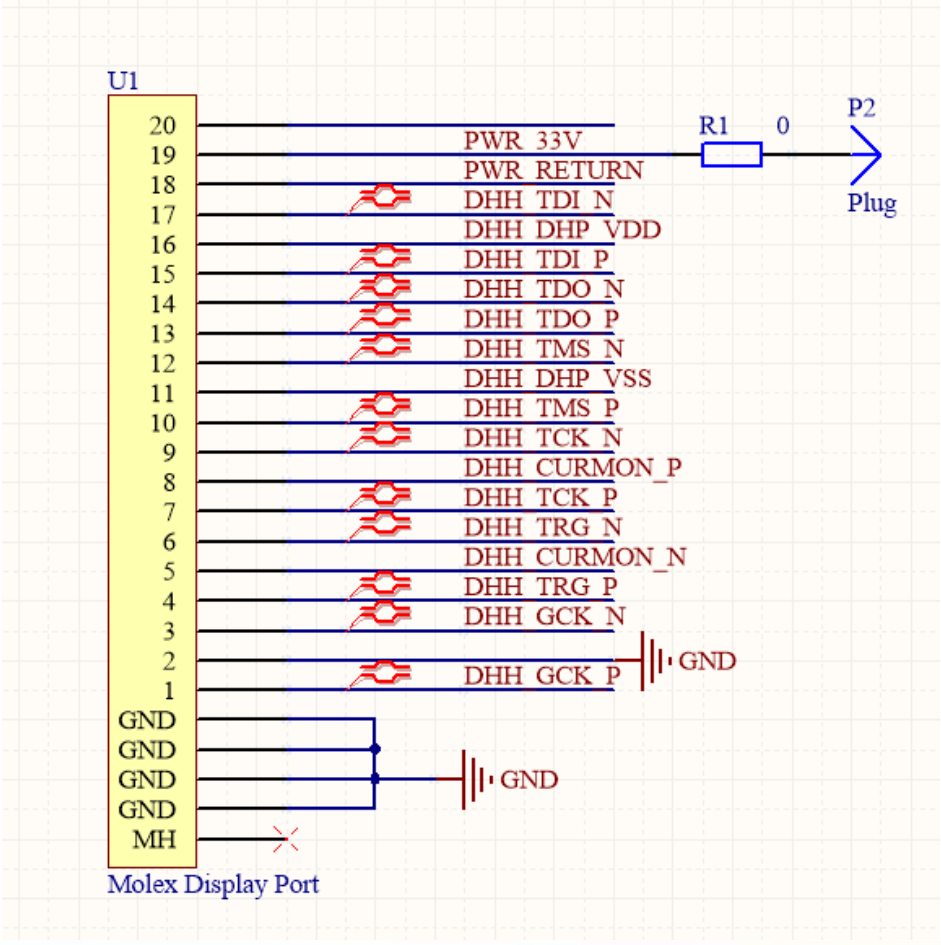

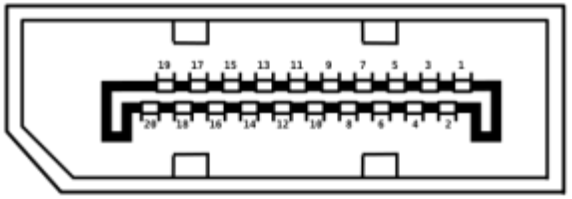

Pin Number	Pin Name
1	ML_Lane 0(p)
2	GND
3	ML_Lane 0 (n)
4	ML_Lane 1 (p)
5	GND
6	ML_Lane 1 (n)
7	ML_Lane 2 (p)
8	GND
9	ML_Lane 2 (n)
10	ML_Lane 3 (p)
11	GND
12	ML_Lane 3 (n)
13	CONFIG1
14	CONFIG2
15	AUX CH (p)
16	GND
17	AUX CH (n)
18	Hot Plug Detect
19	Return
20	DP_PWR

Functional Test Setup

Technische Universität München

A
- Infiniband & RJ45
  - *Data and Control signals*

B
- Quad Optical Transmitter
  - *Data*

C
- Display Port cable
  - *3.3V power for optical transmitter*
  - *Control signals*

D
- Infiniband & RJ45
  - *Control signals*

Test Setup

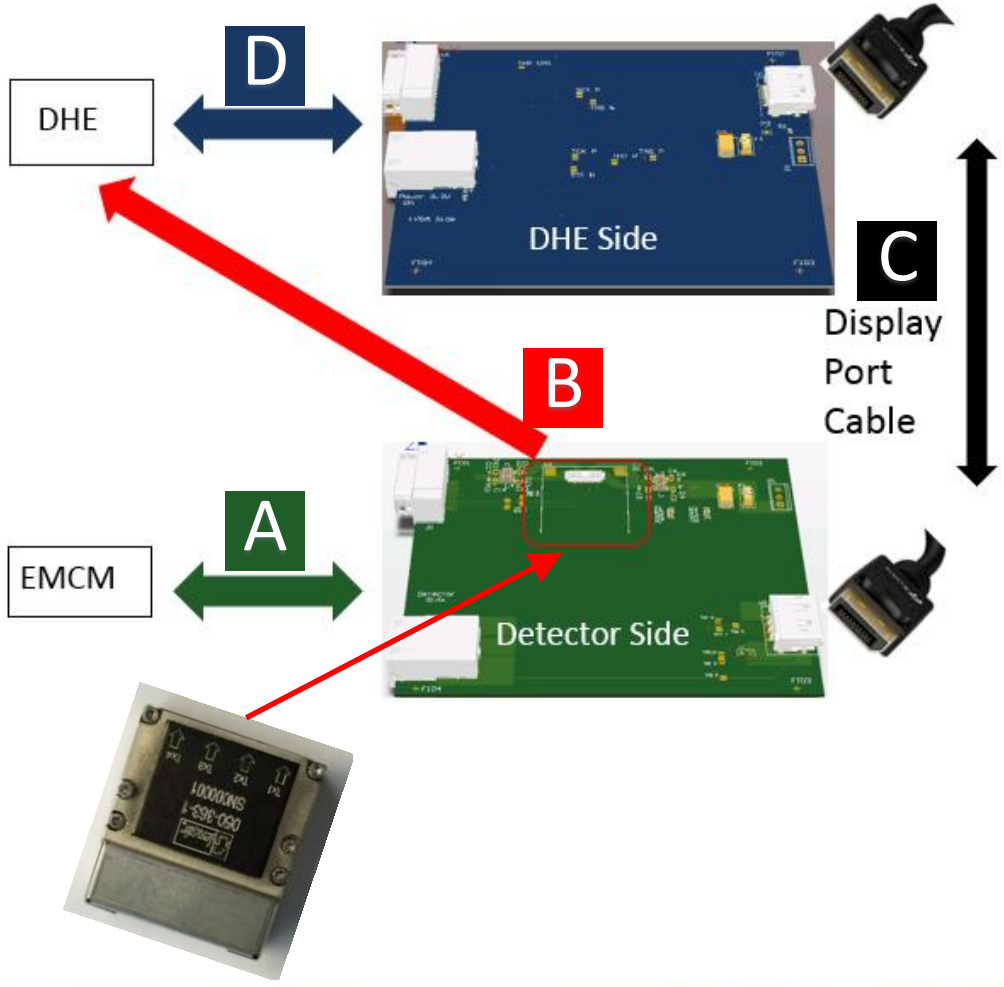

Plans for Gamma Irradiation Test

Technische Universität München

Gammacell 220 II

- Nuclide: Cobalt-60
- Closed unit irradiation chamber
- Size: height 20,6cm; ø 15,2 cm
- Homogeneous value in the centre 4x5 cm

Steps

- Gradually reach Belle II 20 years' equivalent dose : **200 krad**
- Find the maximum dose the Glenair quad optical transmitter can tolerate

Test Preparation

Technische Universität München

Timeline for Preparation

- PCB Production → Submit this week
  → 2 weeks for Production
- PCB Assembly → 1st week of June
- Display port electrical characterization → in June
  TB decision
  Mechanical Agreement
- System Functional Test with DHE and EMCM
  → from June to July
- Gamma Irradiation Test of the Quad Optical transmitter
  → In July

DHE Side

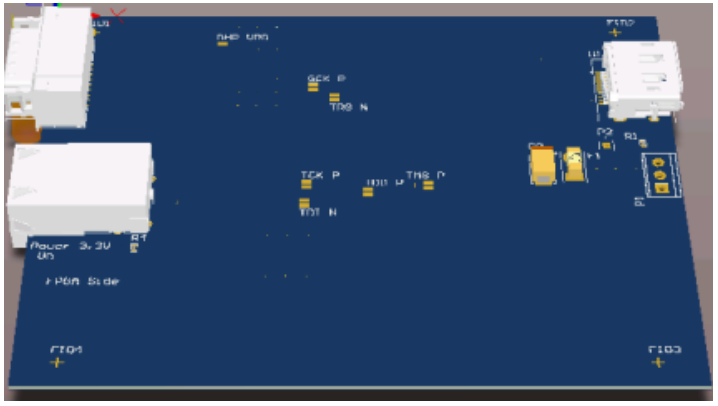

Detector Side

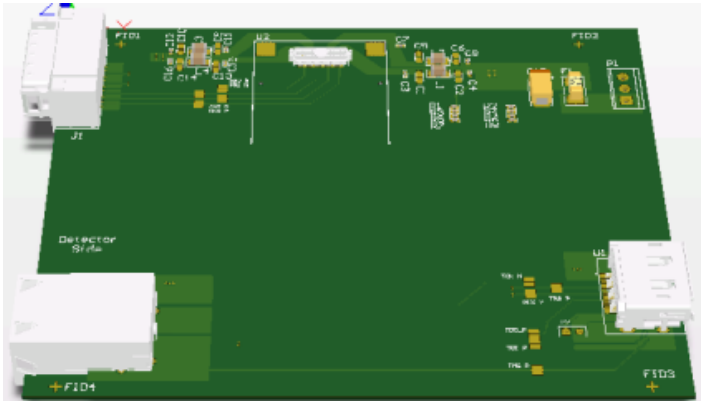

Diagram

Technische Universität München

1. ATCA Carrier

- 5x DHH
  - 2x Inner Layer
  - 3x Outer Layer
- 1x Data Handling Concentrator (DHC)
- Connections between DHEs and DHC

2. Rear Transition Module(RTM)

- 2x 12Channels optical receivers to receive data
- 5x Double height RJ45 connectors for ladder control (JTAG, DHPt Command, DCD current source)
- 1x QSFP connects with ONSEN system
- 2x SFP RJ45 for IPBus control
- 1x RJ45 for B2TT

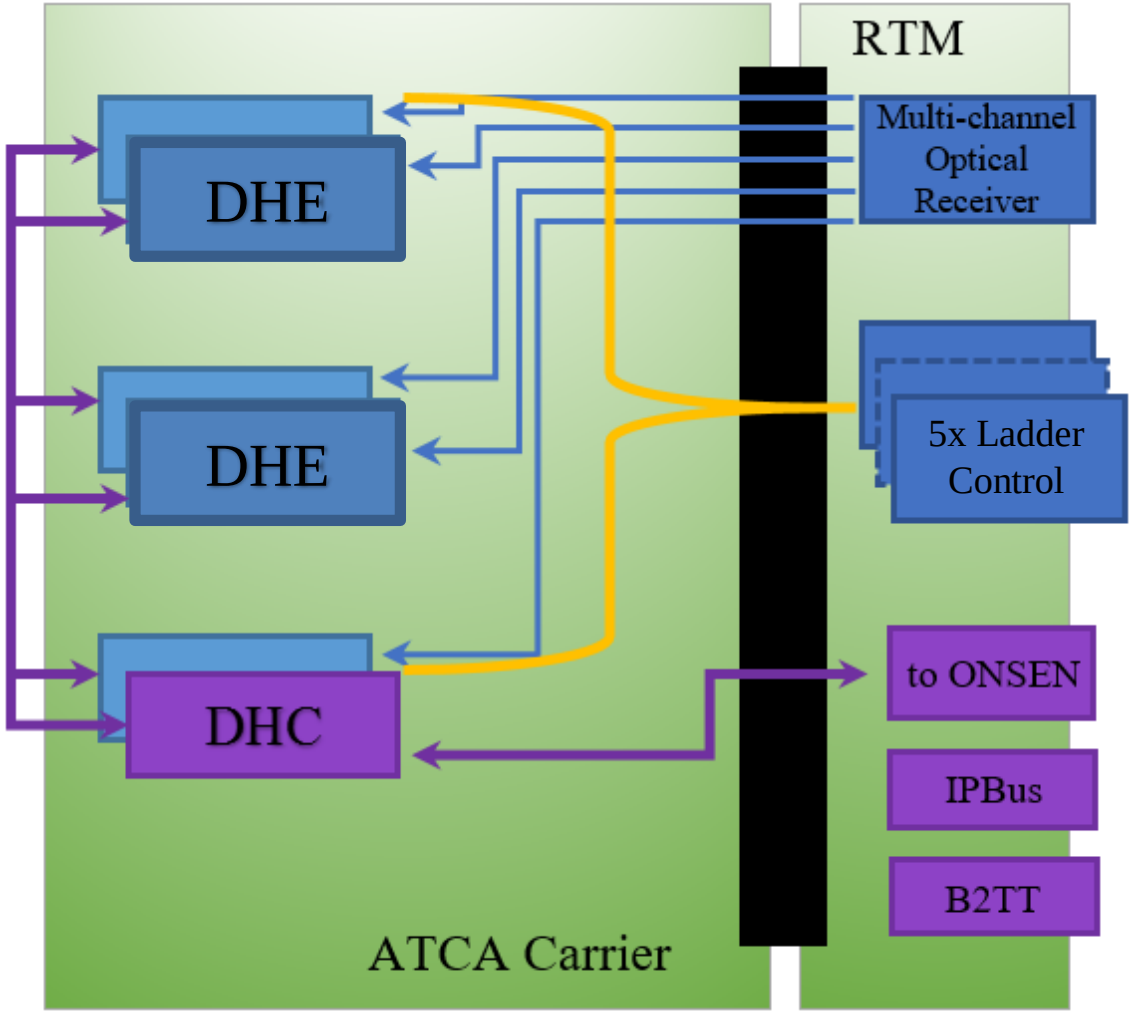

Layout

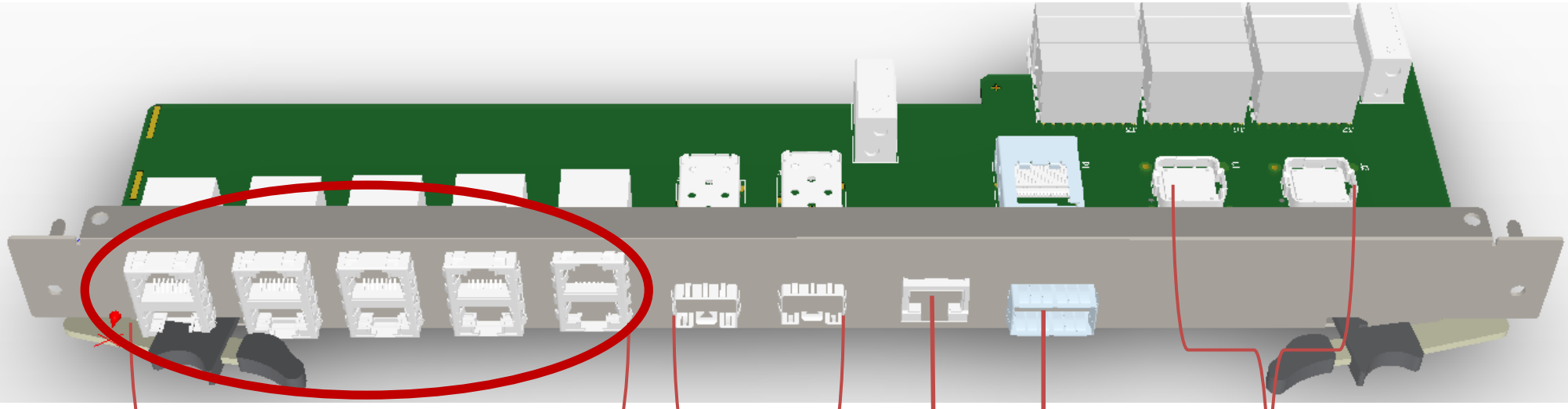

B2TT

2x 12 Channels Receivers

Half Ladder Control

IPBus

ONSEN

**Use Display Port instead of Double height RJ45*

Outline

Technische Universität München

Optical Interface

Summary & Outlook

Outline

Technische Universität München

1. Glenair Optical Transmitter

- System Functional Test → June 2016
- Irradiation Test → July 2016

2. Display Port

- System Functional Test → June 2016
- Signal Quality Check → June 2016

2. RTM for Optical Connection

- Schematic Design → Ready
- PCB Layout and Manufacture → End of Sep. 2016
- System Test → from Oct. 2016 till Nov. 2016

Thank You for Your Attention!

Appendix

Technische Universität München

HelmholtzZentrum münchen
Deutsches Forschungszentrum für Gesundheit und Umwelt

DL - Werte an der ***Gammacell II*** im Jahr 2015

Co^{60} ; $T_{1/2} = 5.27$ a

(Bei Verwendung des Ausgleichsfilters gelten die ***halben*** Werte)

Bestrahlungs-geometrie / Monat	sehr kleine H_2O - Menge Gy min-1	kl. H_2O - Menge im Temp. Becher Gy min-1	ca. 100 ml H_2O im Tem. Becher Gy min-1	0.5 - 1.0 l H_2O Gy min-1
Januar	9,30	8,78	8,37	7,90
Februar	9,19	8,68	8,27	7,82
März	9,10	8,59	8,19	7,74
April	9,00	8,50	8,10	7,65
Mai	8,90	8,41	8,01	7,57
Juni	8,81	8,31	7,92	7,48
Juli	8,71	8,22	7,84	7,40
August	8,61	8,13	7,75	7,32
September	8,52	8,04	7,67	7,24
Oktober	8,43	7,96	7,58	7,16
November	8,33	7,87	7,50	7,08
Dezember	8,24	7,78	7,42	7,01

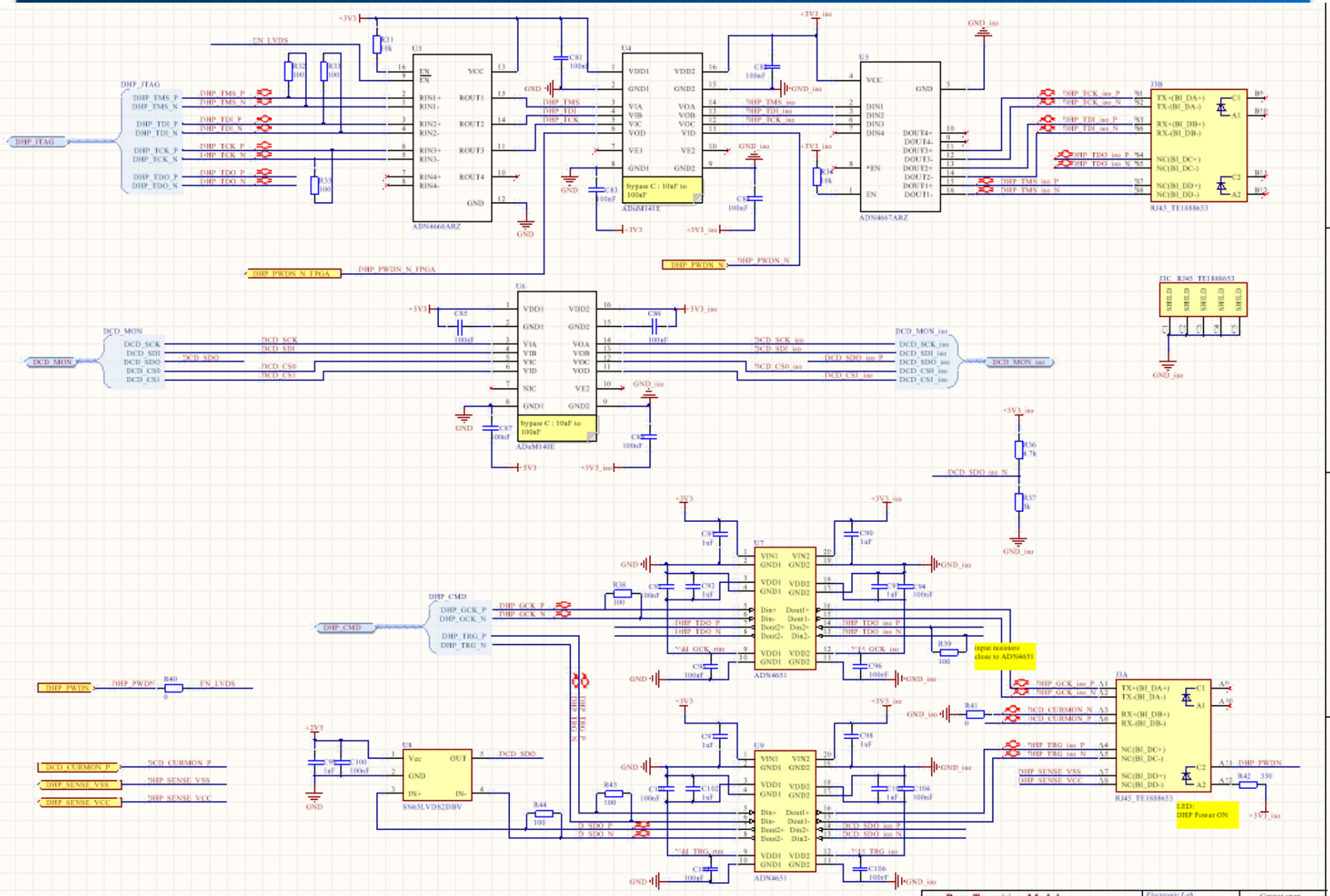
Rear Transition Module
Electronic Lab
TUM PH E18
James Franck Strasse 1
85748, Garching
Germany
Name: DHP_RJ45.SchDoc
Size: A4
Revision: 0
Date: 13.01.2016
Drawn By: Y. Bai
Sheet * of *
File: C:\Users\ybai2-E18\Belle II\2016\Valencia\RTM_Optical\Schematic\DHP_RJ45.SchDoc
Cannot open file D:\Altium\Templates\a18_logo.la
ADN4668ARZ
ADuM140E
ADN4667ARZ
RJ45_TE1888653
ADN4651
SN65LVDS2DBV
DHP_JTAG
DCD_MON
DHP_CMD
EN_LVDS
DHP_PWDN
DHP_PWDN_N_FPGA
DHP_PWDN_N
LED:
DHP Power ON

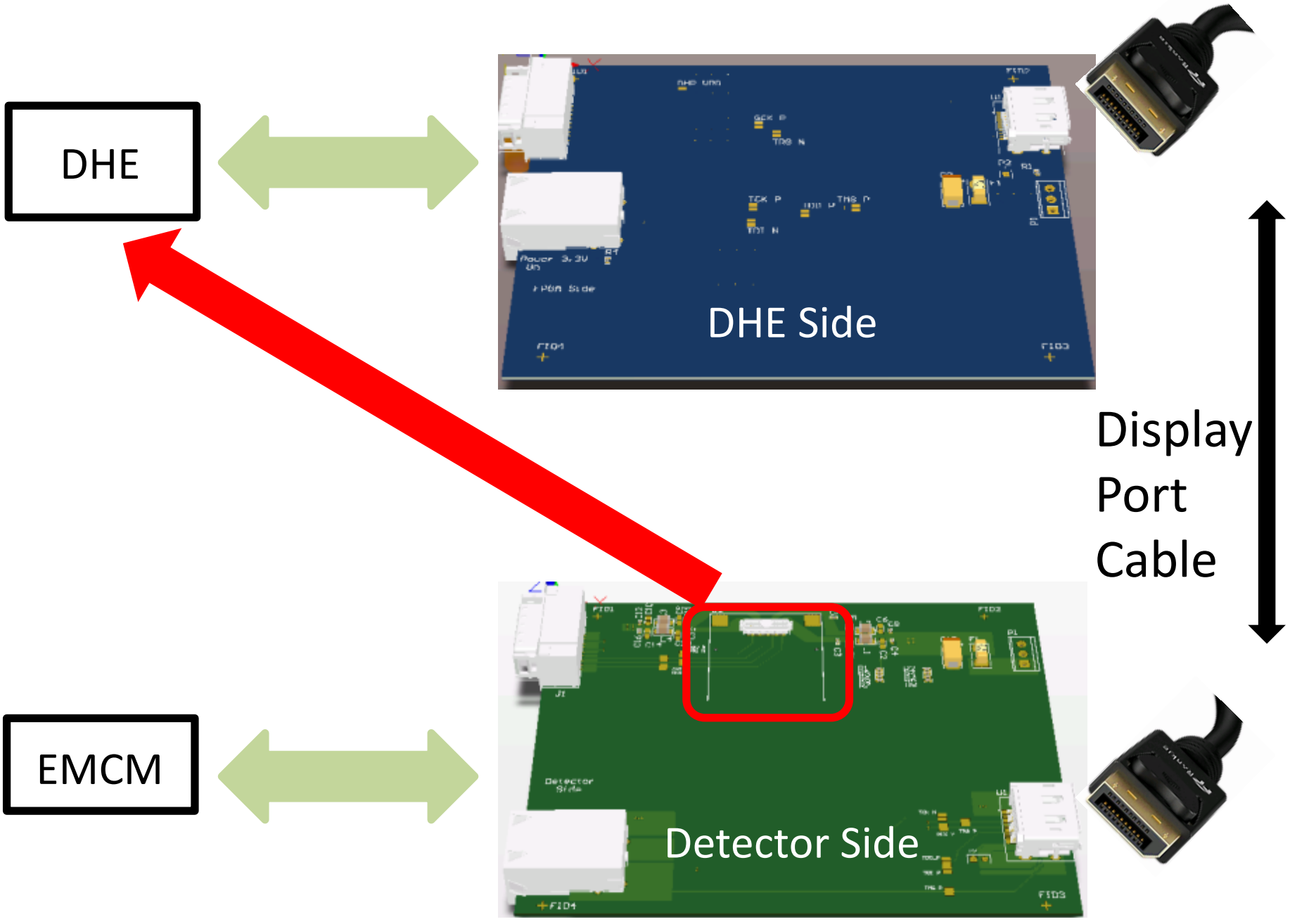
DHE
DHE Side
Display
Port
Cable
EMCM
Detector Side