Status of

AIM

Alternative **I**nstallation **M**ethod for the **VXD**

20th International Workshop on DEPFET Detectors and Applications
Kloster Seeon (Germany), 13.05.2016

Speaker: David Kittlinger

Institute: Max-Planck-Institute for Physics, Munich/Germany

Contact: david.kittlinger@mpp.mpg.de

Overview

- IN PRODUCTION: VXD-dummy

  cable trays

  crane tool modifications

- CDC-MOCKUP @ MPI: CDC-cone-area / VXD-area

- UPCOMING TESTS: VXD-dummy installation @ MPI

  Bellow installation @ MPI

  Cable alignment/installation @ MPI

VXD-dummy

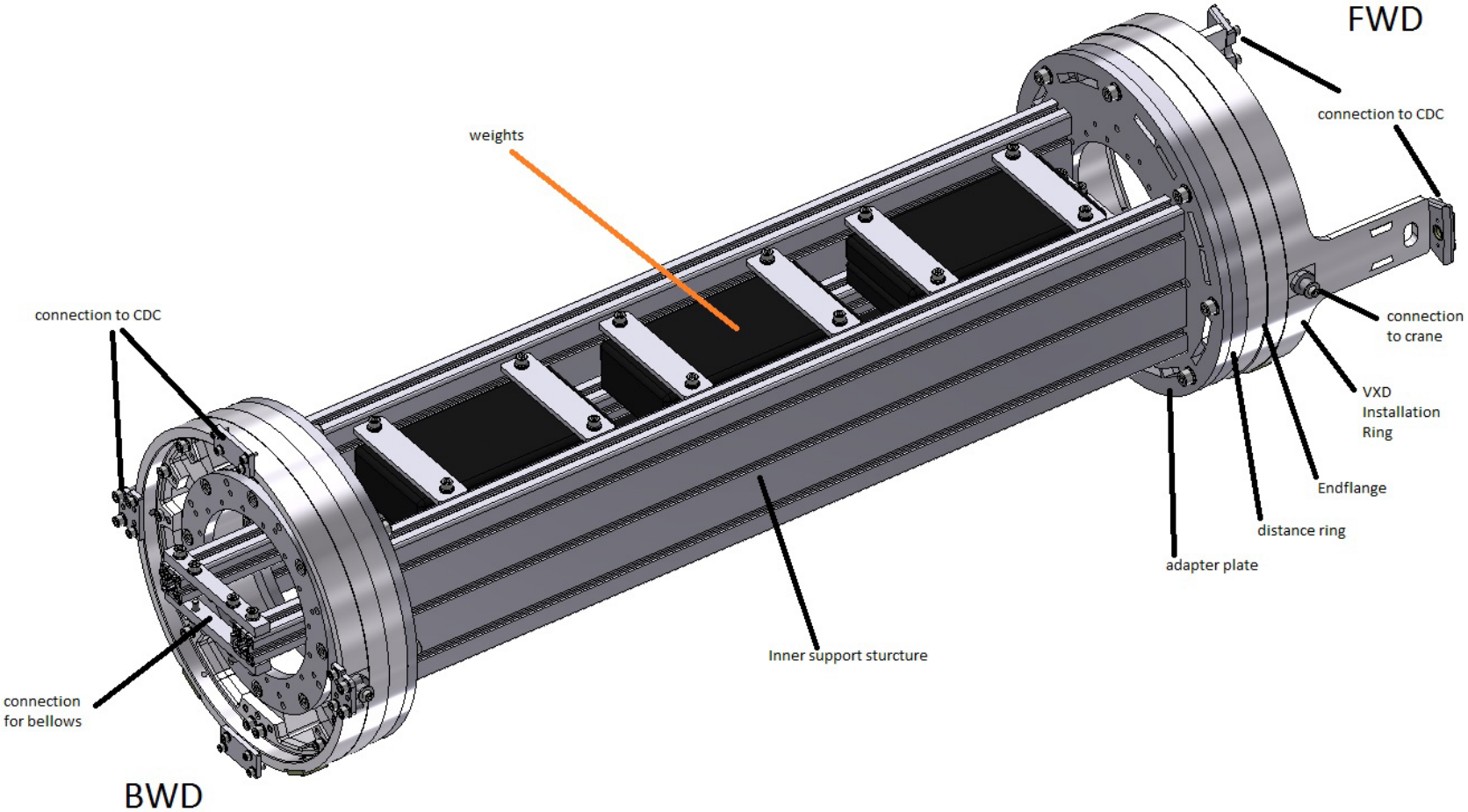
FWD
connection to CDC
weights
connection to CDC
connection
to crane
VXD
Installation
Ring
Endflange
distance ring
adapter plate
Inner support sturcture
connection
for bellows
BWD

cable trays

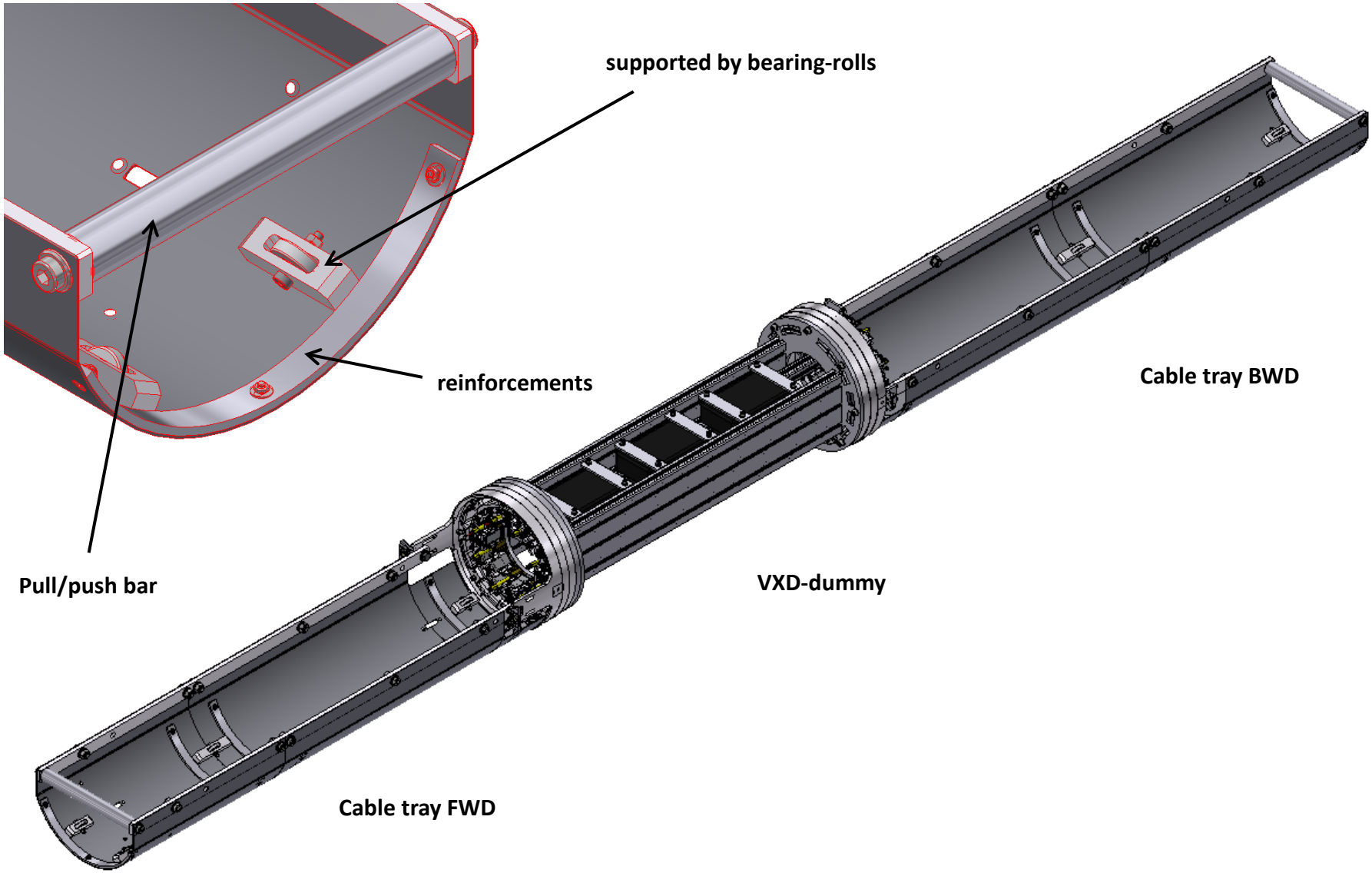
supported by bearing-rolls
reinforcements
Pull/push bar
Cable tray BWD
VXD-dummy
Cable tray FWD

Crane tool modifications

Before modification:

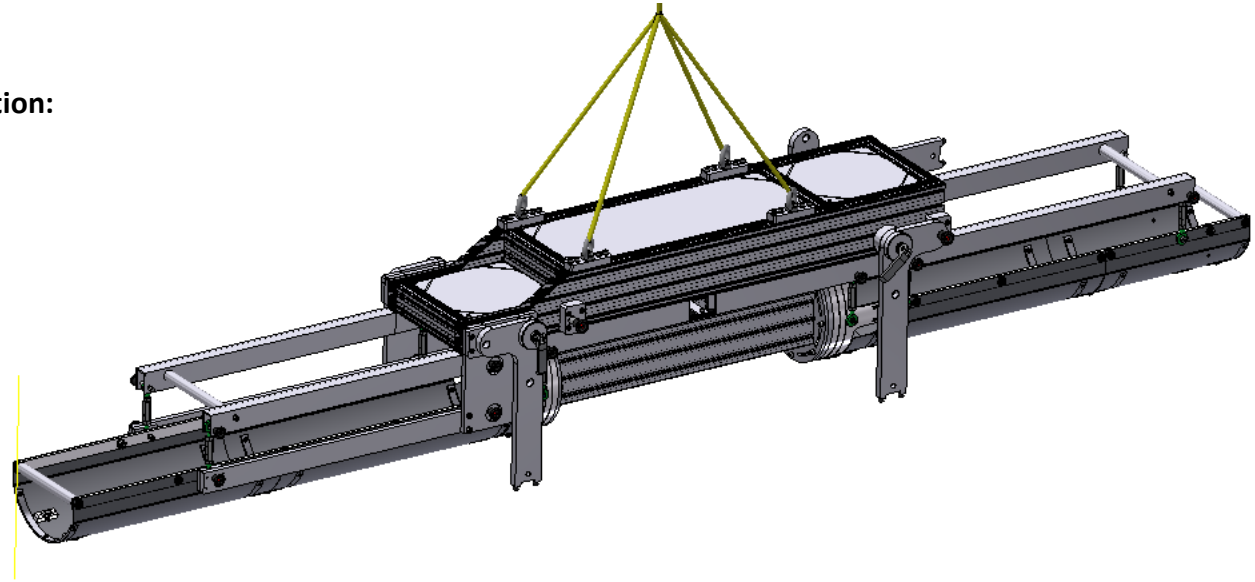

After modification:

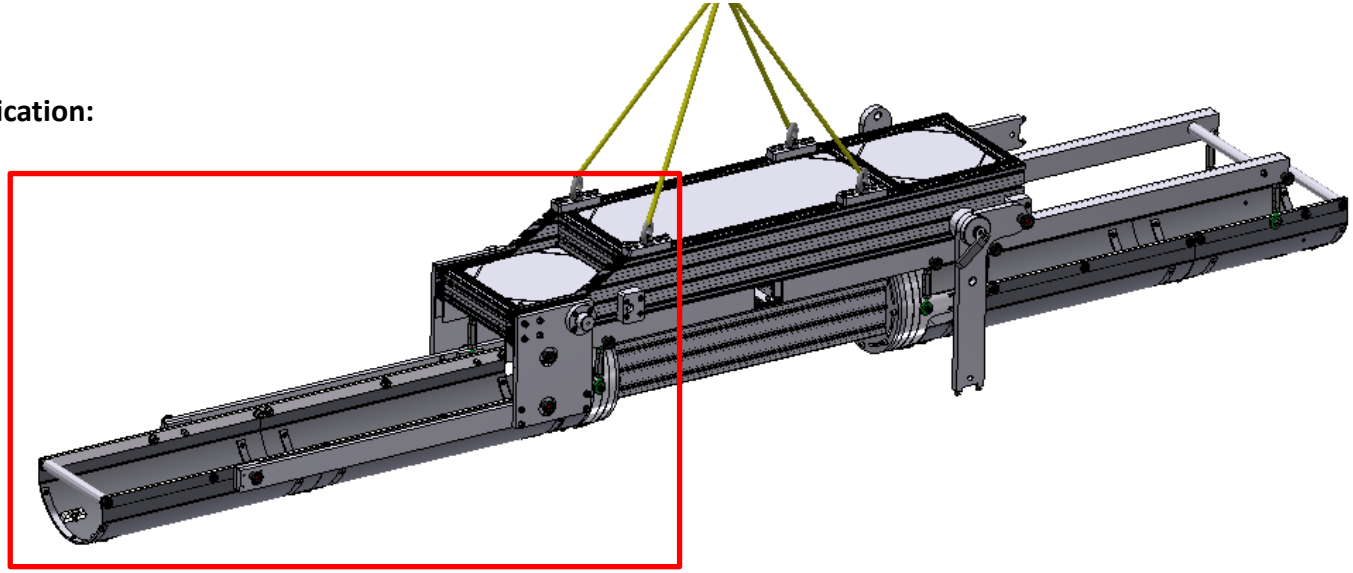

Crane tool modifications

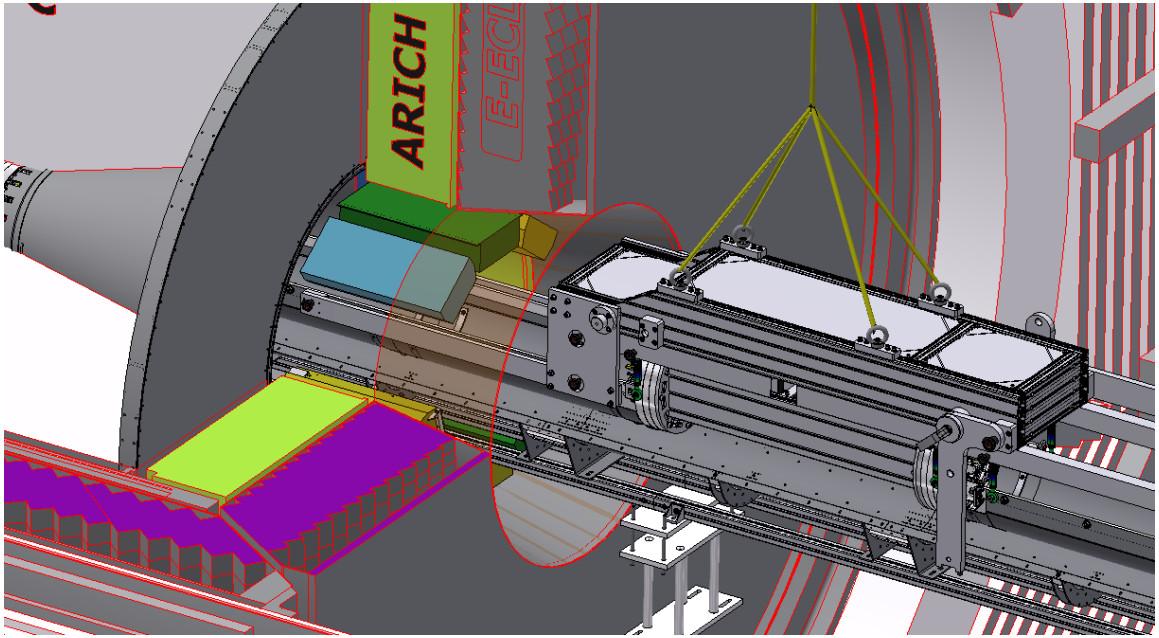

Reason of the modification:

Early dockbox installation =>

Collision of „crane tool cantilever“ with dockboxes

Modifications could be easily **integrated** in the current design of the **crane tool**

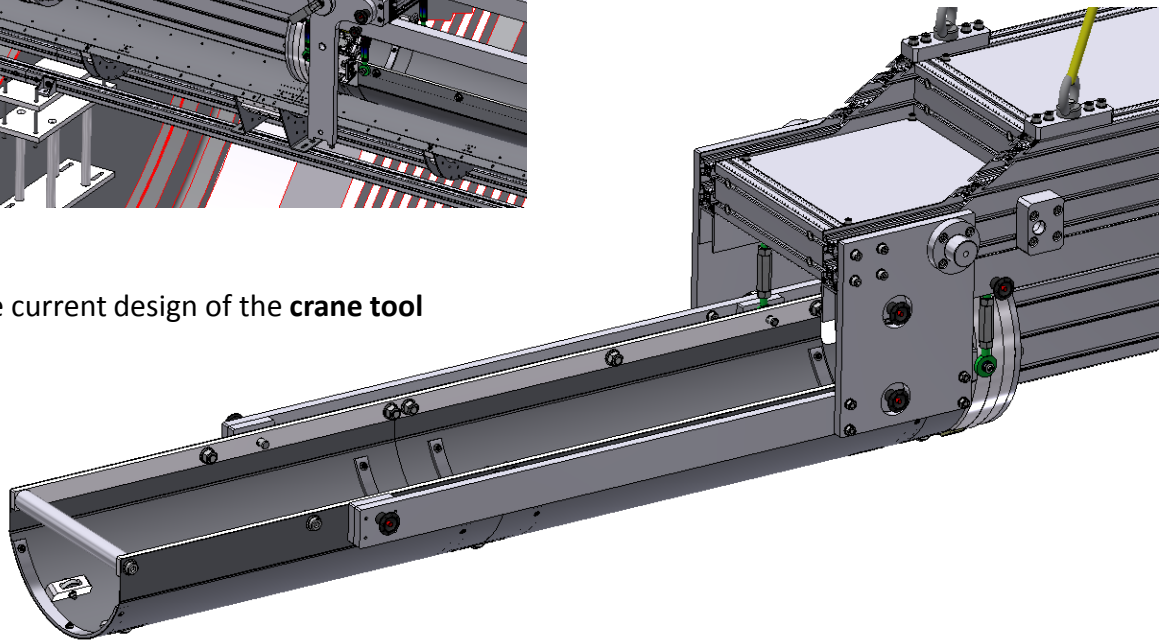

CDC-Mockup @ MPI: Cone area

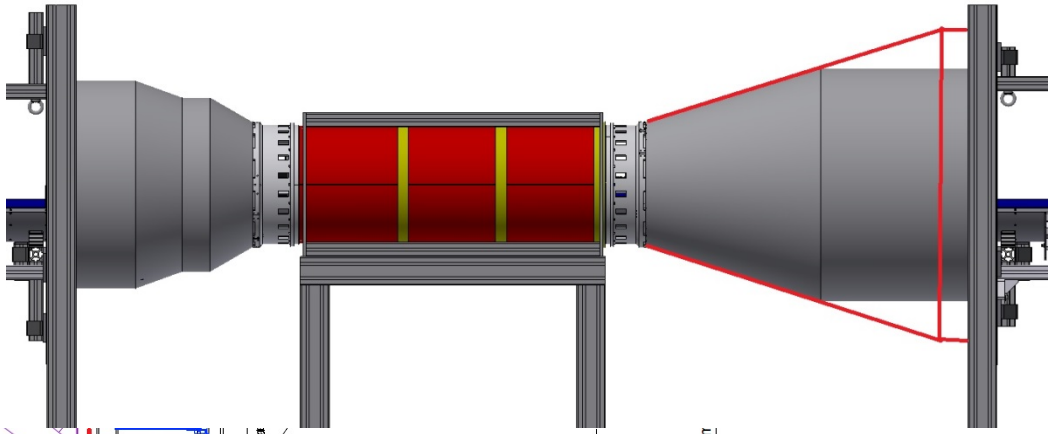

Rebuild the CDC-cone FWD for:

- cable laying
- connection with dock rings
- a realistic installation test

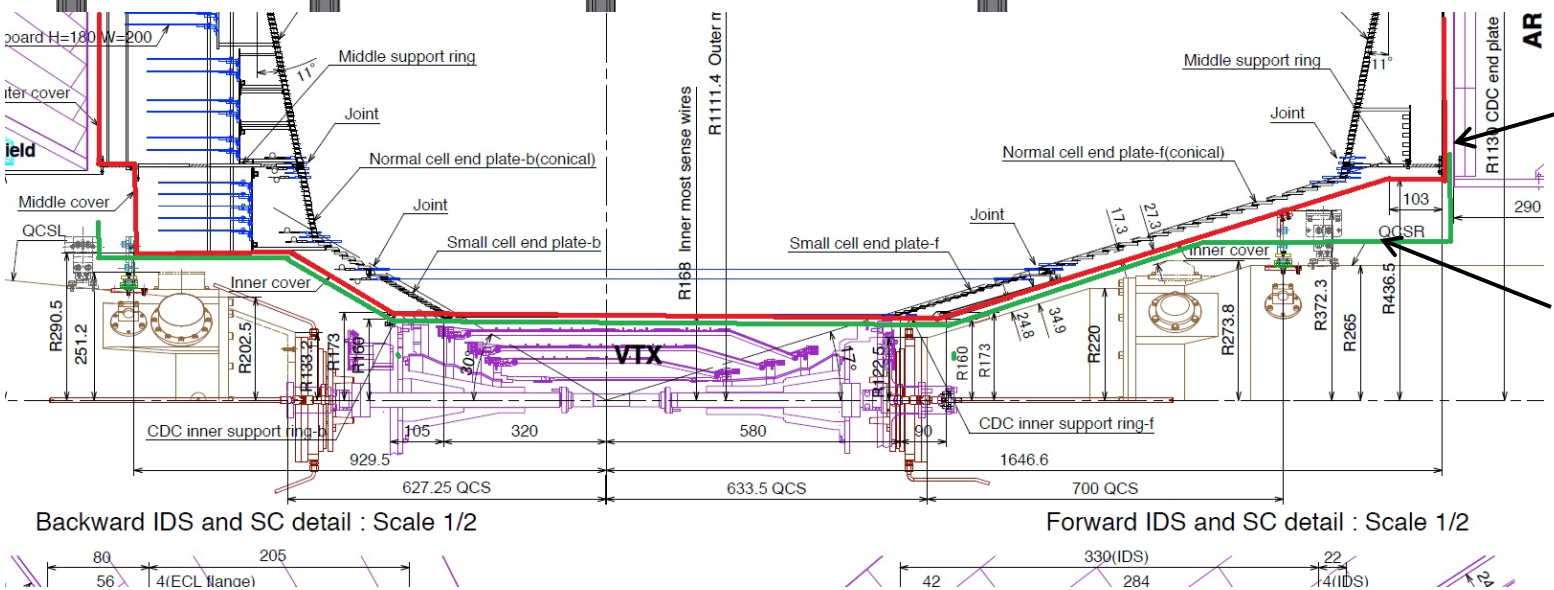

Real

CDC mock-up shape

Current

CDC mock-up shape

CDC-Mockup @ MPI: VXD area

Modifications on the inner area of the CDC:

- Connect and align the **CDC-inner-rings** FWD & BWD more **accurate**
- Hold the **CDC-inner-cylinder** (red)

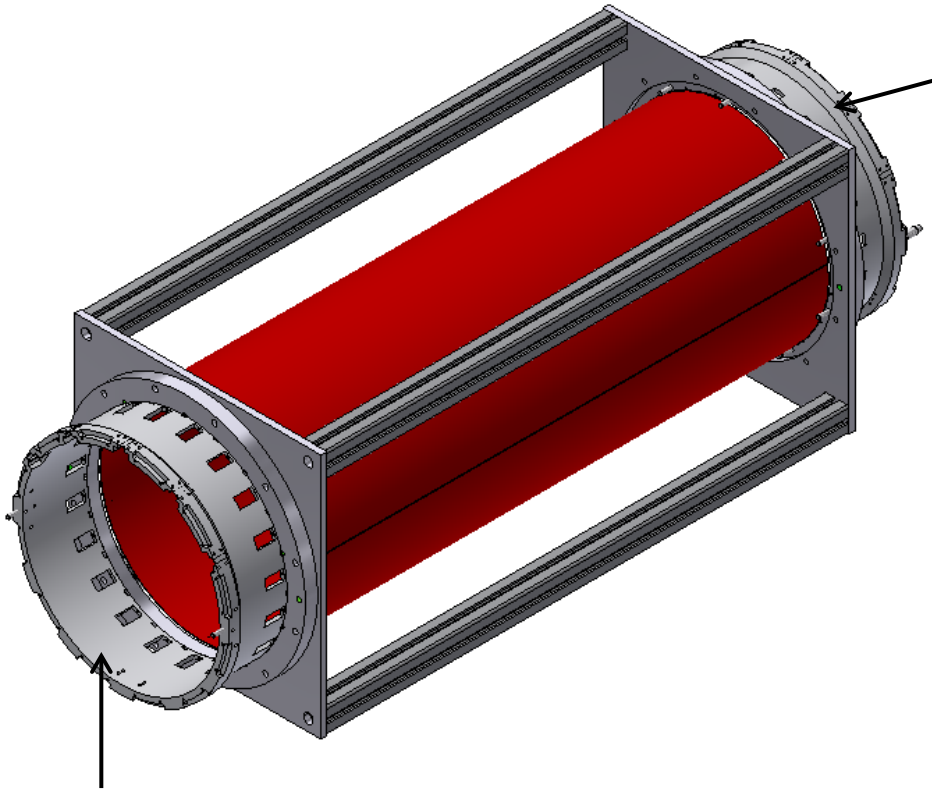

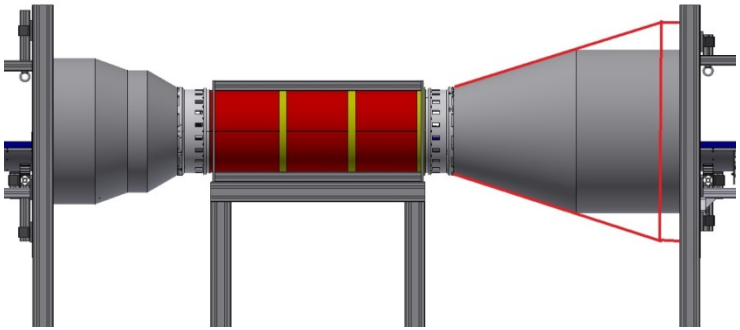

Test: VXD-dummy installation

Testing the procedure:

- **Slide in** the VXD-Dummy -> mounting tube, glide pads
- **Align** the VXD-Dummy & CDC in the horizontal plane -> slide-in-ledges, guide-pins
- **Mount** the brackets on the BWD side -> brackets, pins

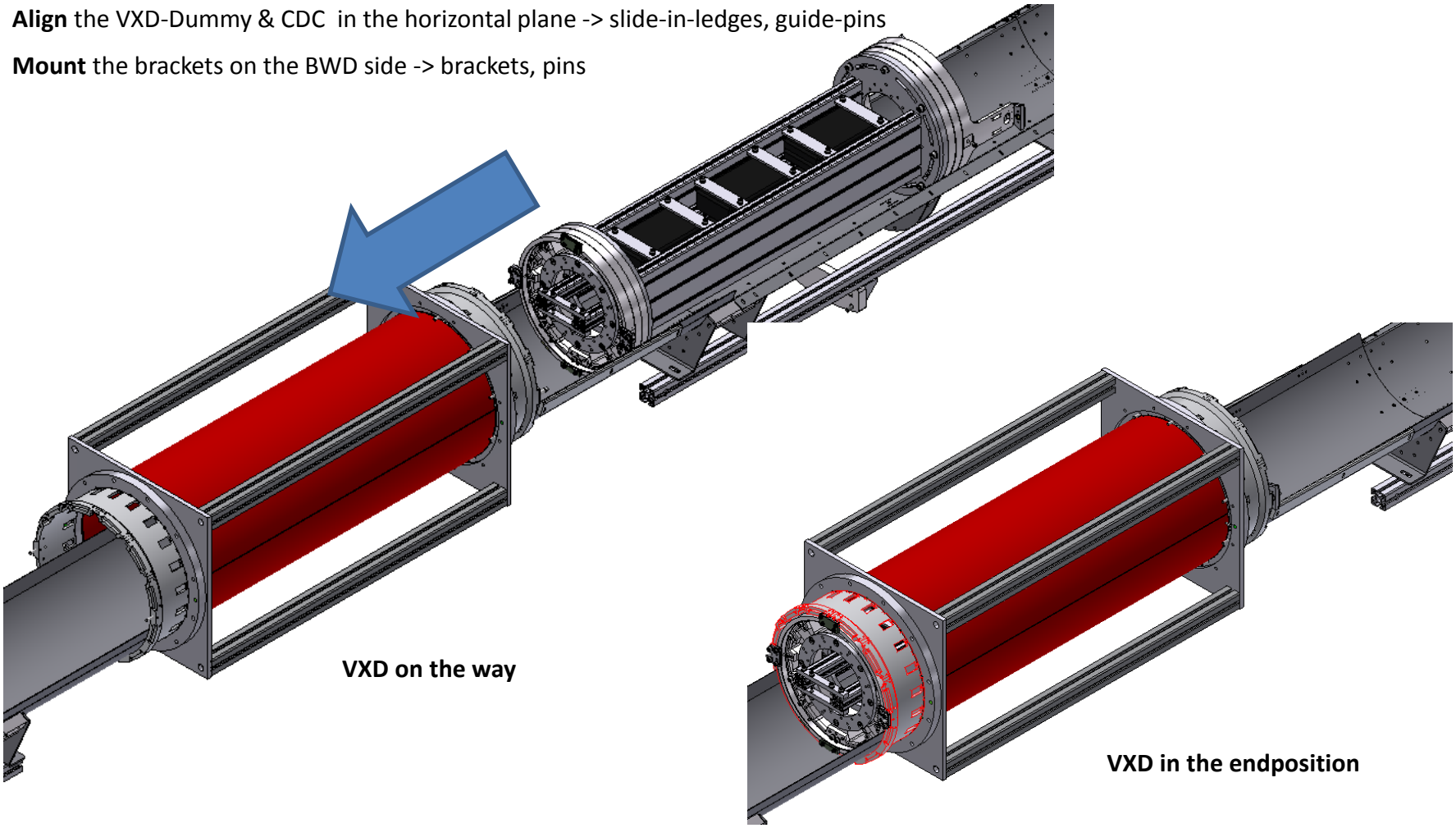

Test: Bellow installation

General: The **bellows** will connect the **beampipe** between the **VXD** and the **QCS**

Test: There will be a **test-Installation** of the bellows at the VXD/CDC-mock-up @ MPI:

- Connect the **RVC-connection-shield** to the bellows
- **Original bellows** (from DESY RVC-test-setup) will be used
- Very **sensitive area** (beampipe, sensors) with **restricted space** (patch panels with cables) that is **not easy to reach**.
- The test will be done by Karsten Gadow (DESY)

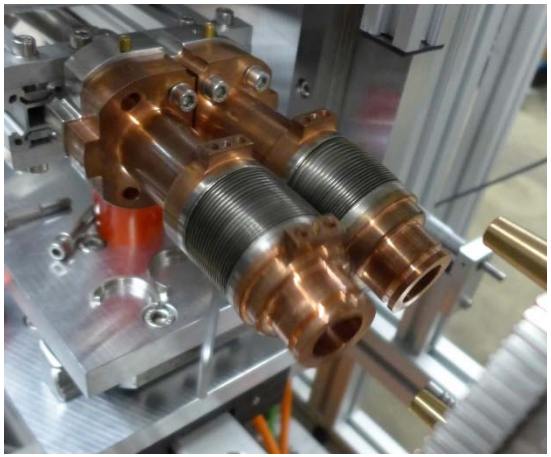

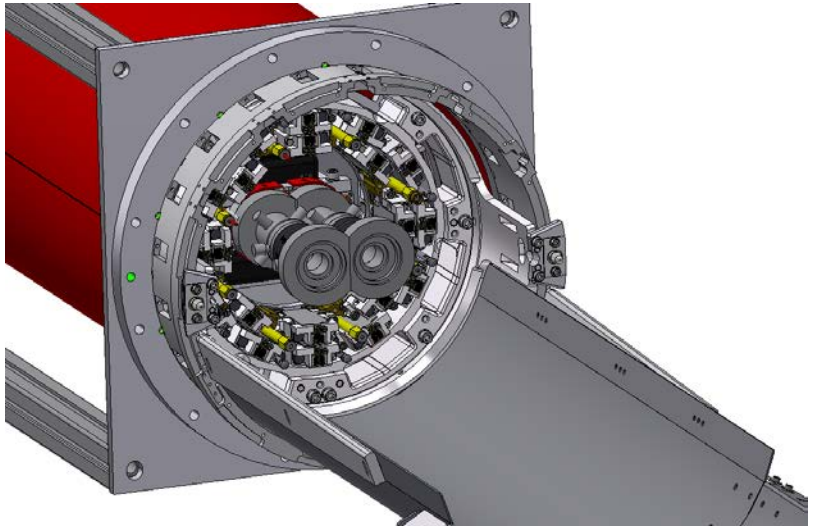

Mock-up from the FWD-side

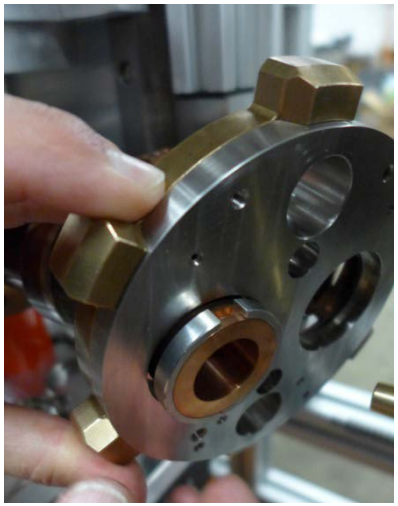

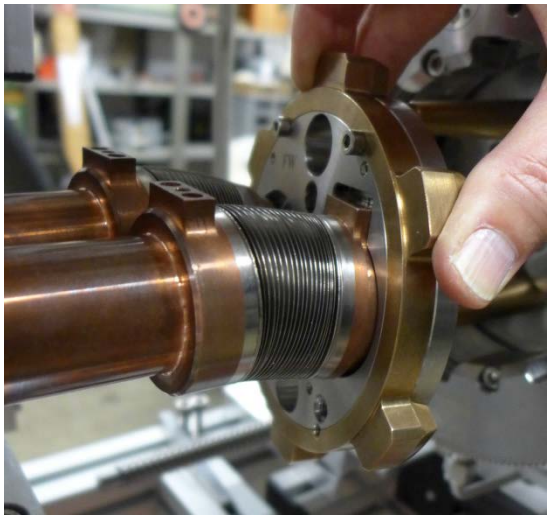

Pictures from the RVC-test-setup at DESY (Hamburg)

Test: Cable alignment/installation

General: The **cables** will be laid from the **VXD** to the **dockboxes**

Test: There will be a **test-Installation** with a new cable-mock-up at the VXD/CDC-mock-up @ MPI:

- How to **reach and fix** the position of the cables in the CDC-cone
- How to **connect** the cables to the dockboxes
- Quality of the cables – **shape** and **flexiblity**

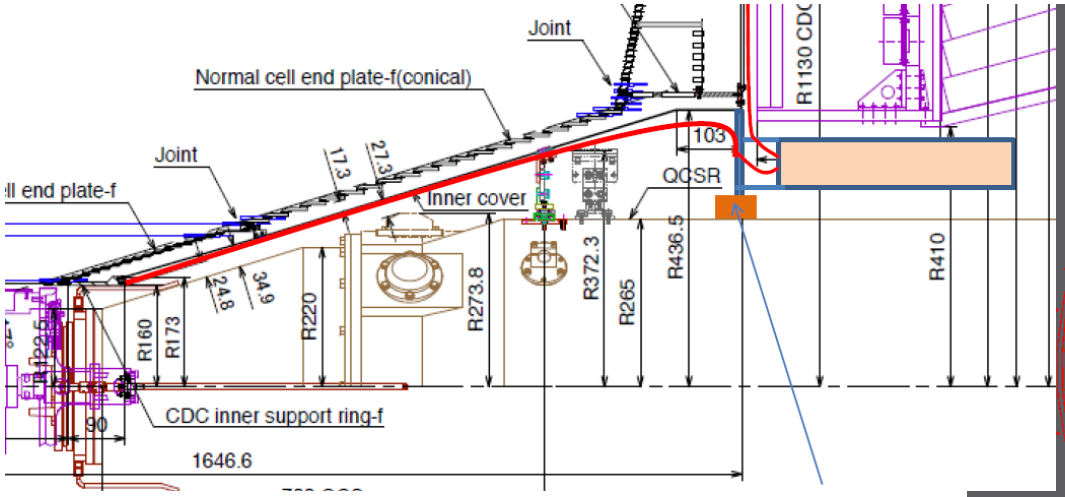

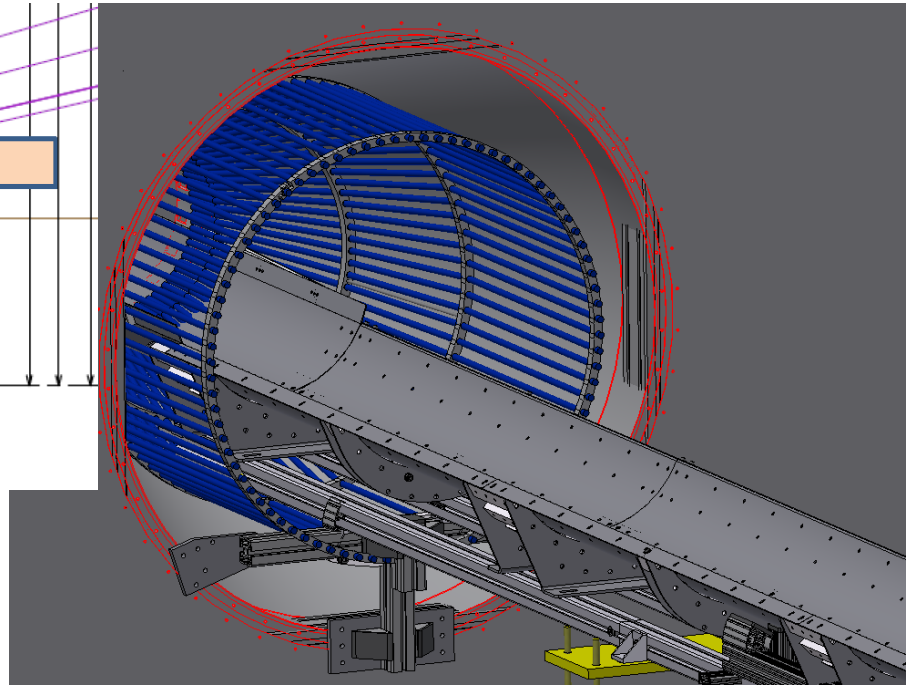

Mock-up from the FWD-side

Summary

- IN PRODUCTION: VXD-dummy

  cable trays

  crane tool modifications

- CDC-MOCKUP @ MPI: CDC-cone-area / VXD-area

- UPCOMING TESTS: VXD-dummy installation @ MPI

  Bellow installation @ MPI

  Cable alignment/installation @ MPI

Next

- COMPLETE the mock-up-setup and installation-tool till this summer
- REALIZE all the tests at MPI
- SEND the installation-equipment to Japan
- PERFORM further installation tests on the Belle2-detector (roll-out-position) after Oct. B2GM

Thank you for your attention!

Do you have any questions?

Speaker: David Kittlinger

Institute: Max-Planck-Institute for Physics, Munich/Germany

Contact: david.kittlinger@mpp.mpg.de