CO_2 Flexlines

carsten.niebuhr@desy.de

VXD Cooling Pipe Layout

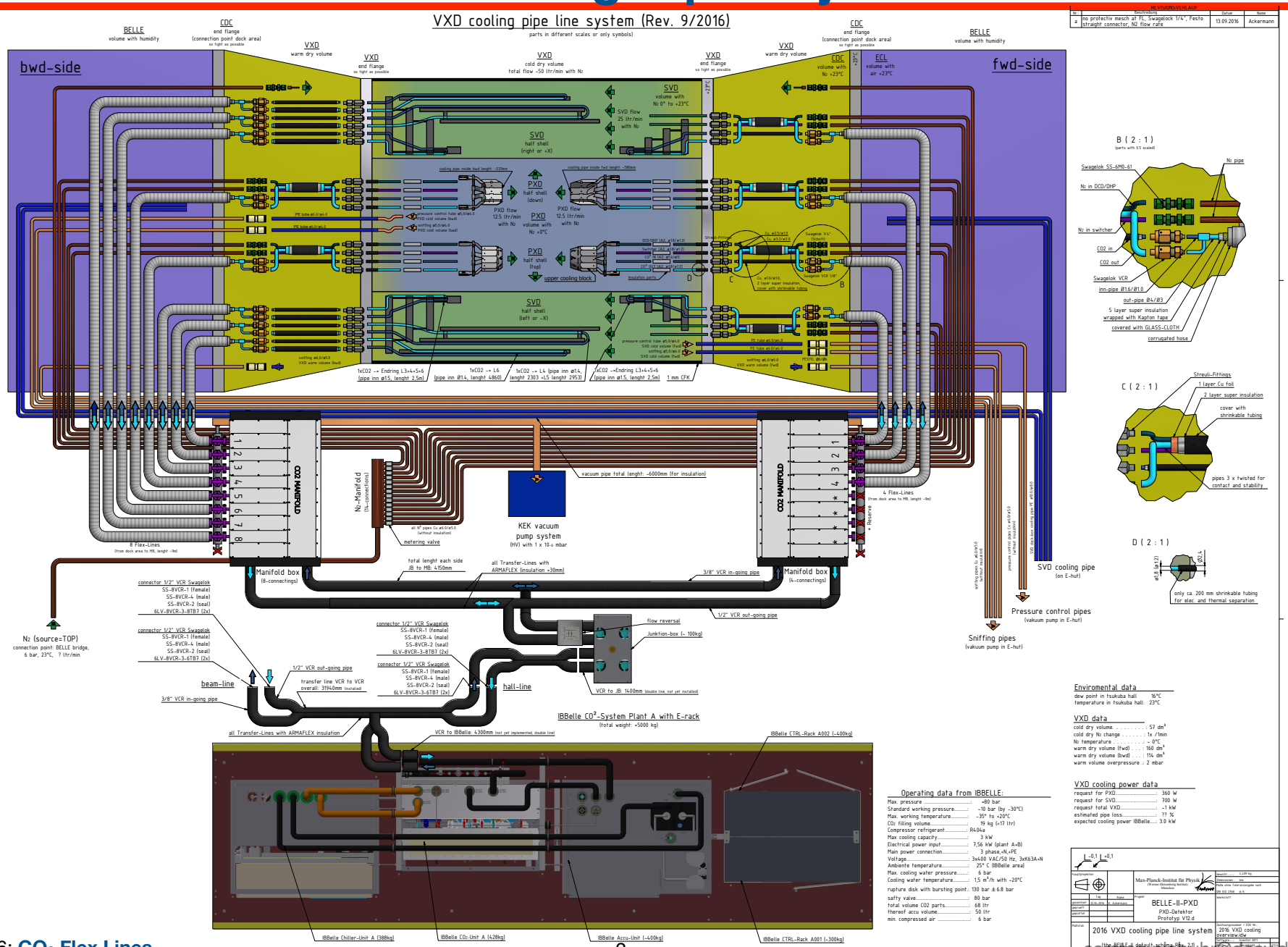

Flex Line Routing

T. Ackermann

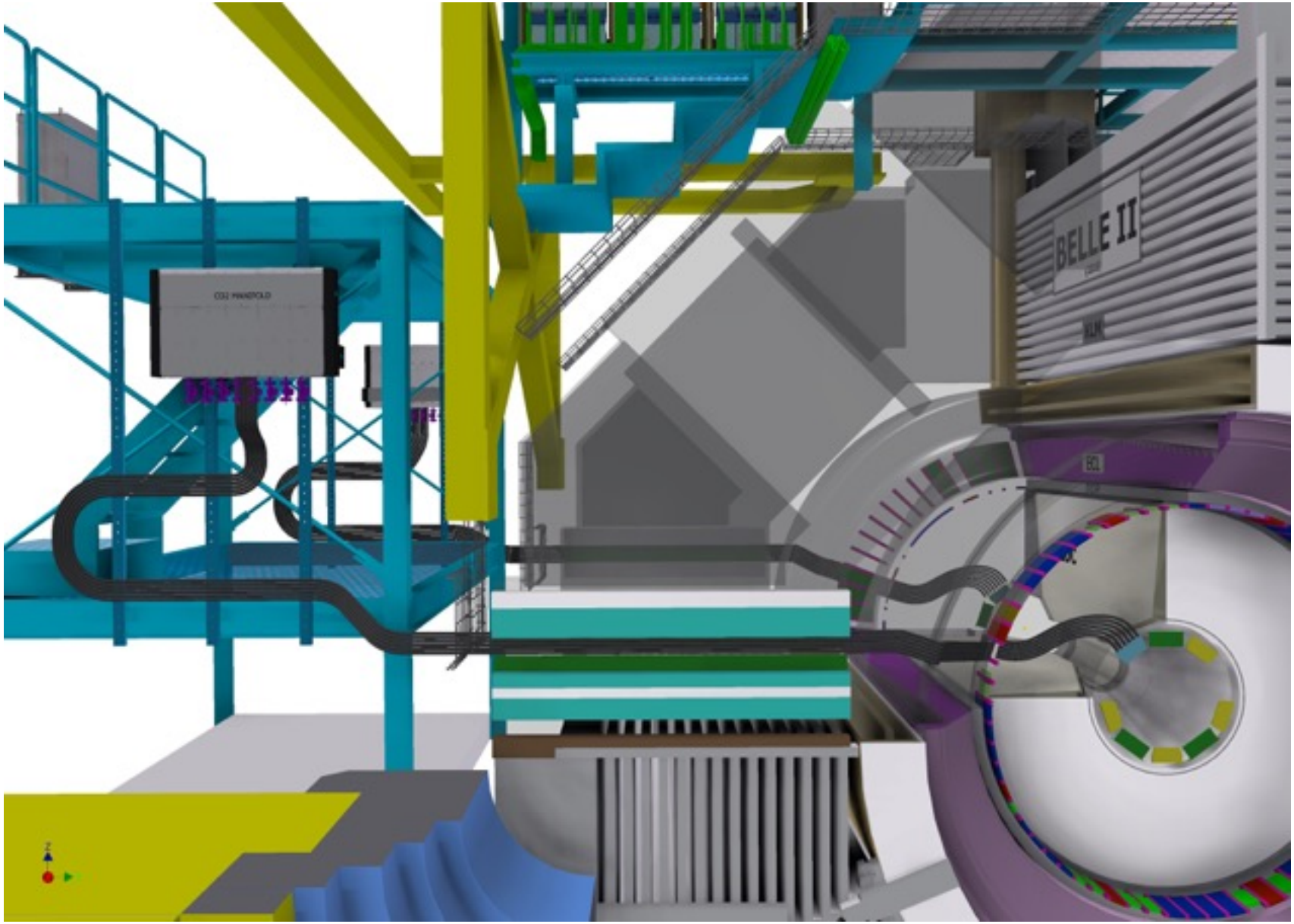

Flex Line Design

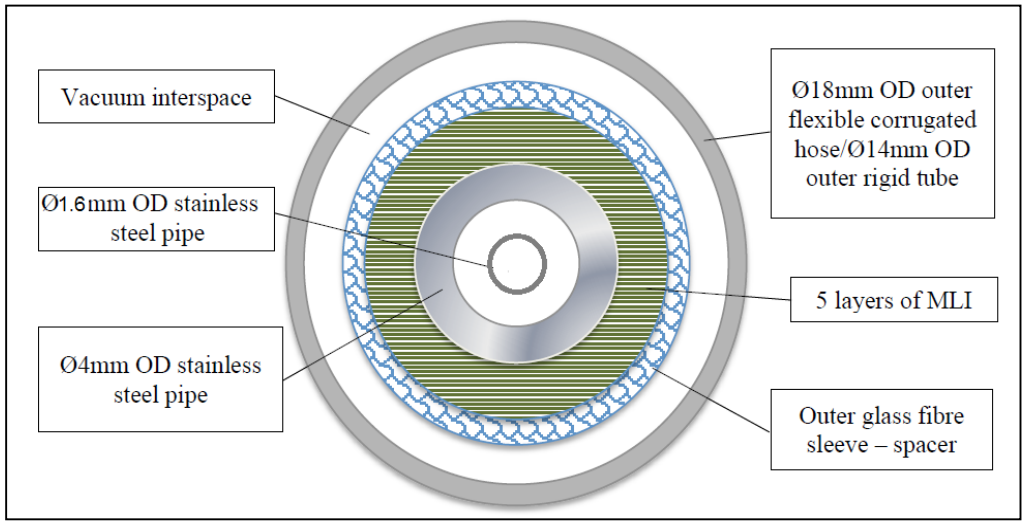

Design layout based on cryogenics insulation technics

From inside:

- CO_2 inlet ss capillary (Ø 1.6 mm OD)
- CO_2 return ss pipe (Ø 4 mm OD)
- Multi Layer Insulation (MLI): used to avoid heat transfer by radiation
- Glass fibre sleeve: to limit conduction btw the inner pipe and the outer hose
- Vacuum flex hose: to reduce the heat picked up from environment by convection

Flex Line Design

S. Vogt MPI

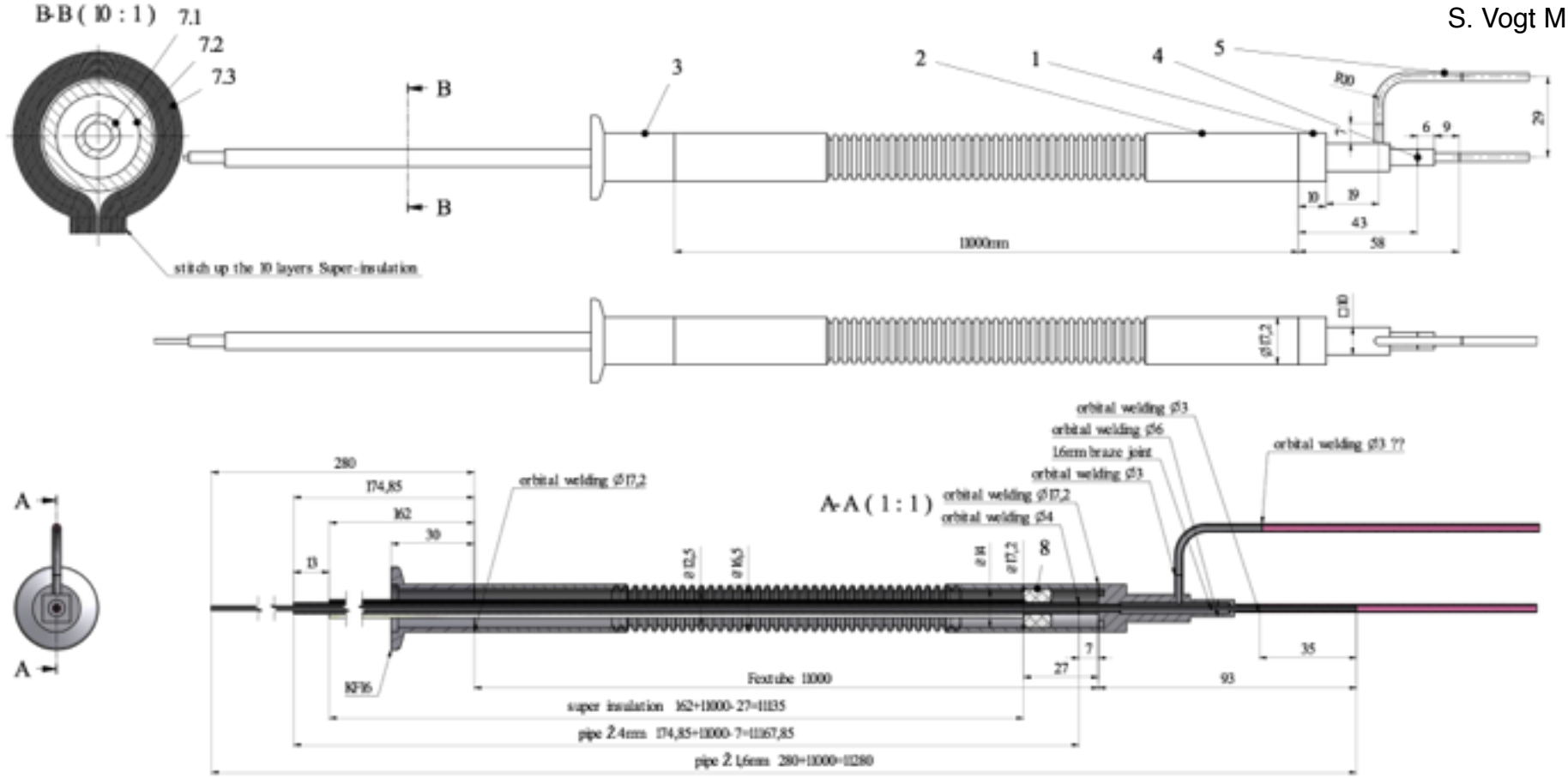

- Flexible hoses 8.5m long –> total length of flex line 9m
- Currently we have material for 19 (26) pipes
  - in December will install 12 lines
  - no space for spare pipes in Belle II

Flex Line Design

S. Vogt MPI

Hey Houston, the flex lines are too short!
Is Claudio there?

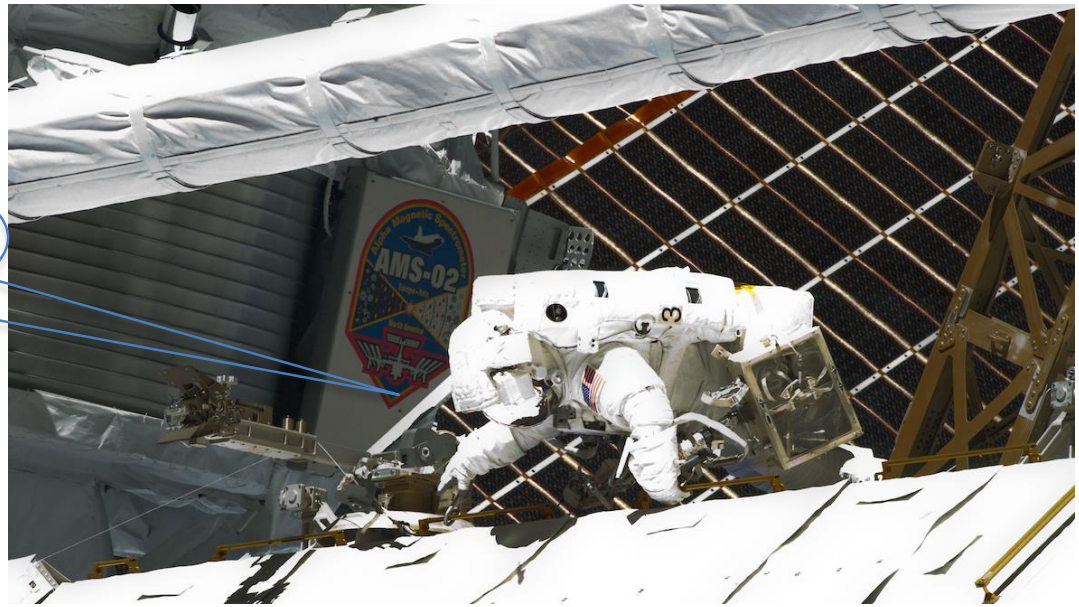

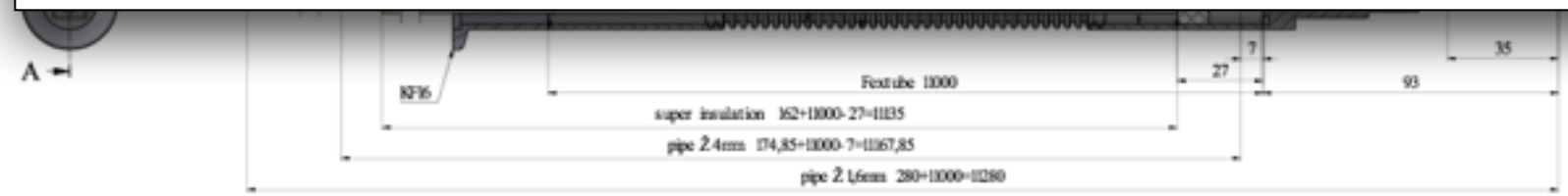

- Flexible hoses 8.5m long –> total length of flex line 9m
- Currently we have material for 19 (26) pipes
  - in December will install 12 lines
  - no space for spare pipes in Belle II

Flex Line Design

S. Vogt MPI

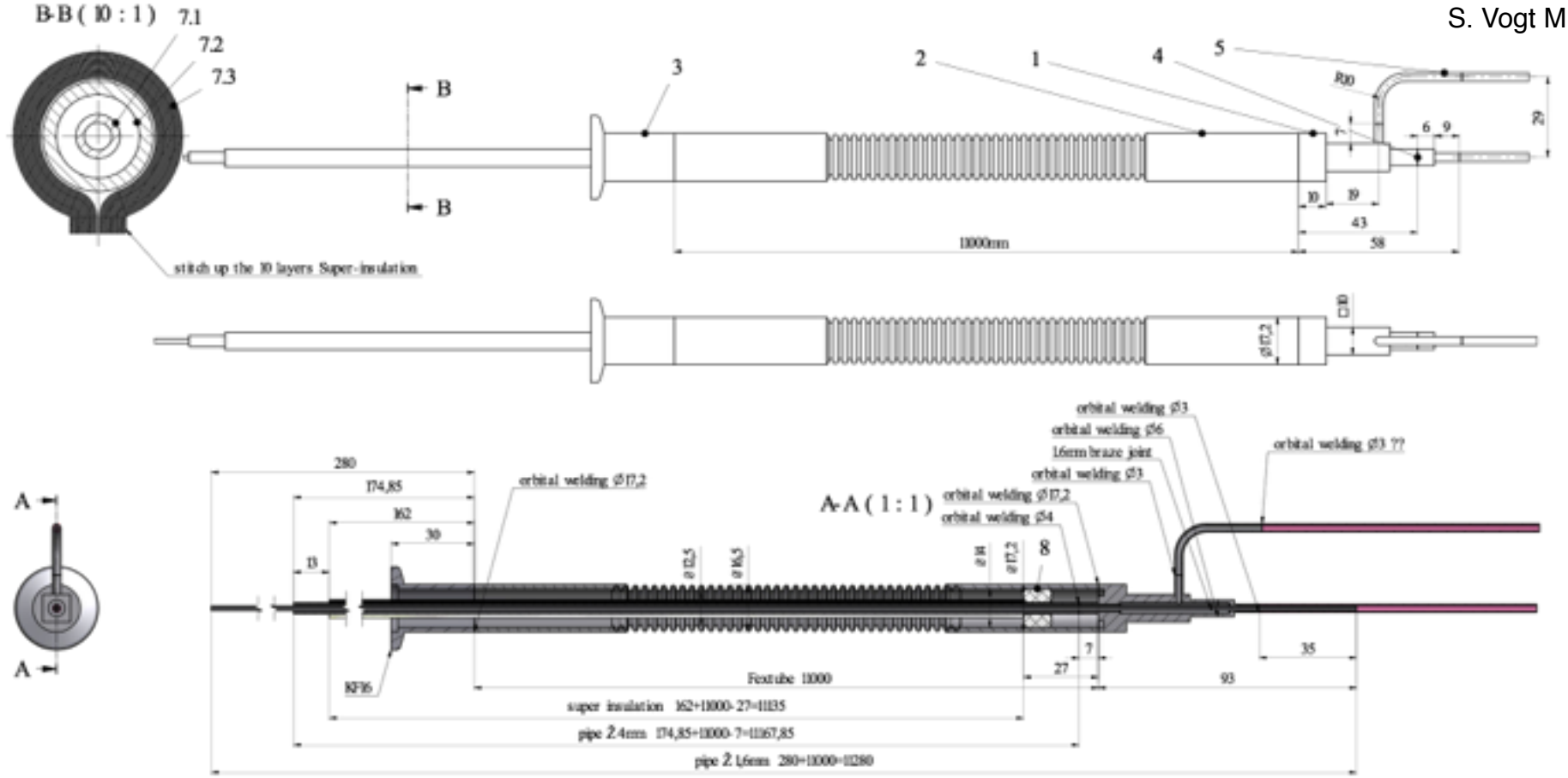

- Flexible hoses 8.5m long –> total length of flex line 9m
- Currently we have material for 19 (26) pipes
  - in December will install 12 lines
  - no space for spare pipes in Belle II

Flex Line Design

S. Vogt MPI

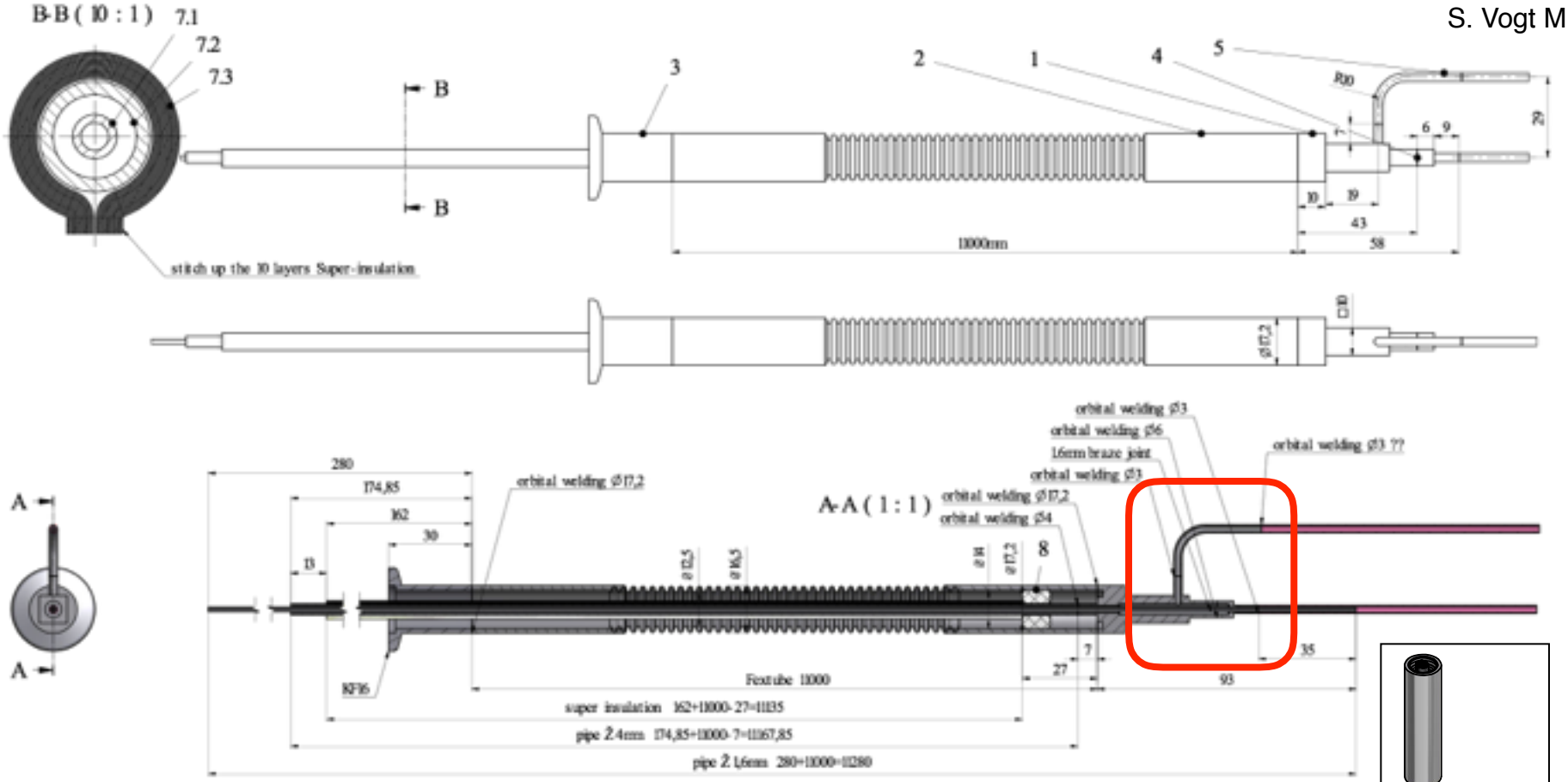

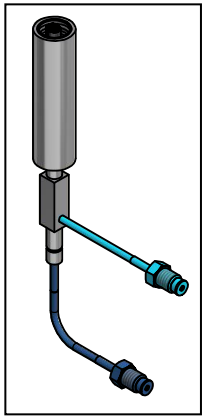

Proposed modification
to be agreed w/ K.Gadow

- Flexible hoses 8.5m long –> total length of flex line 9m
- Currently we have material for 19 (26) pipes
  - in December will install 12 lines
  - no space for spare pipes in Belle II

Last missing Piece: Rotatable Connector

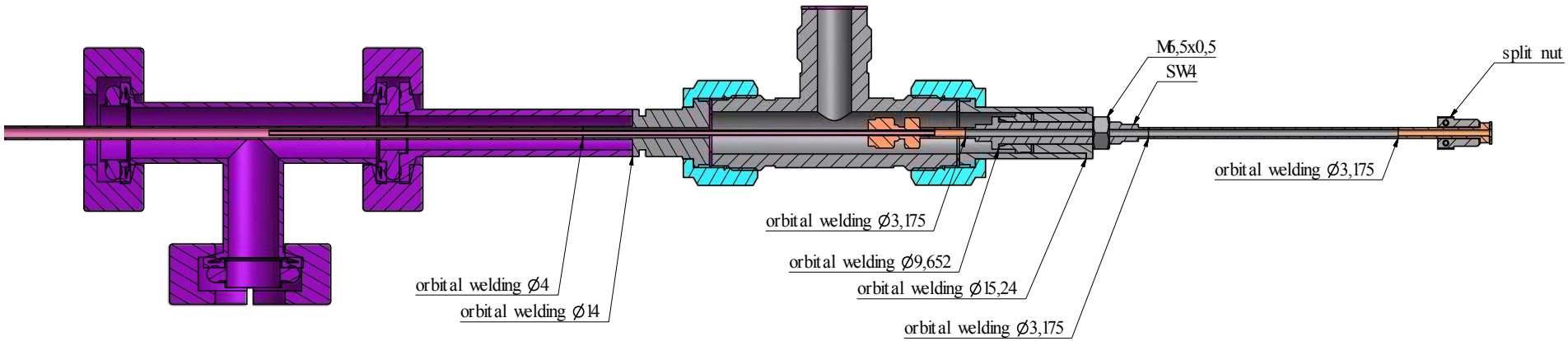

- Machining and orbital welding carried out at MPI
- 20 pieces brought to DESY this week
- Helium leak test will be performed at DESY

Assembly Site Detector Lab in Hall West

Components and Orbital Welding Equipment

Welding Tests

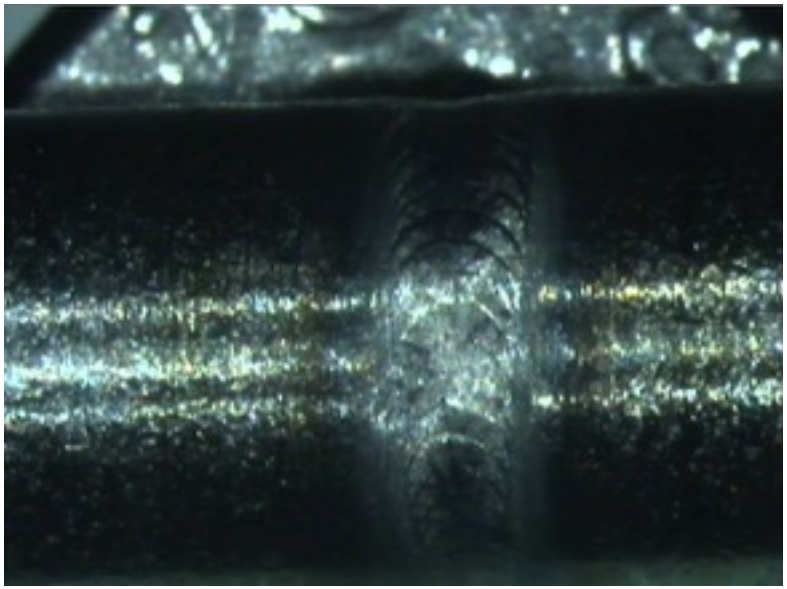

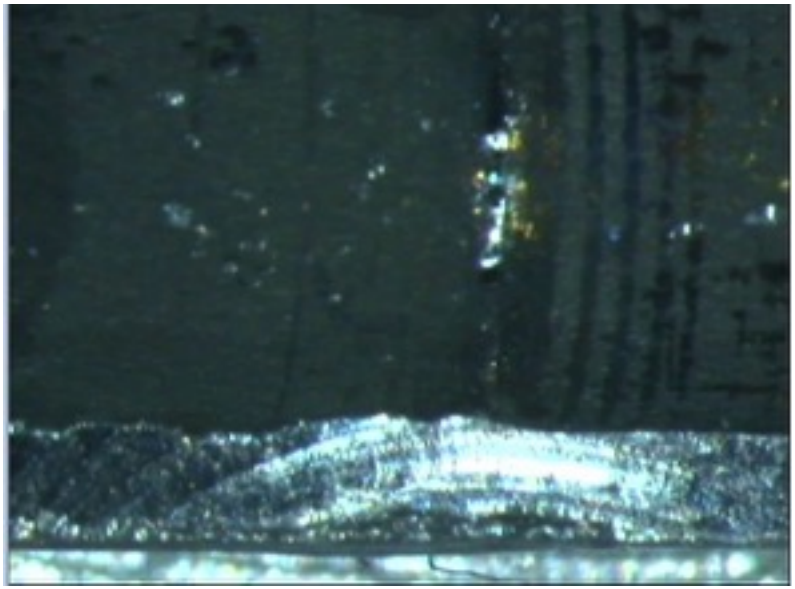

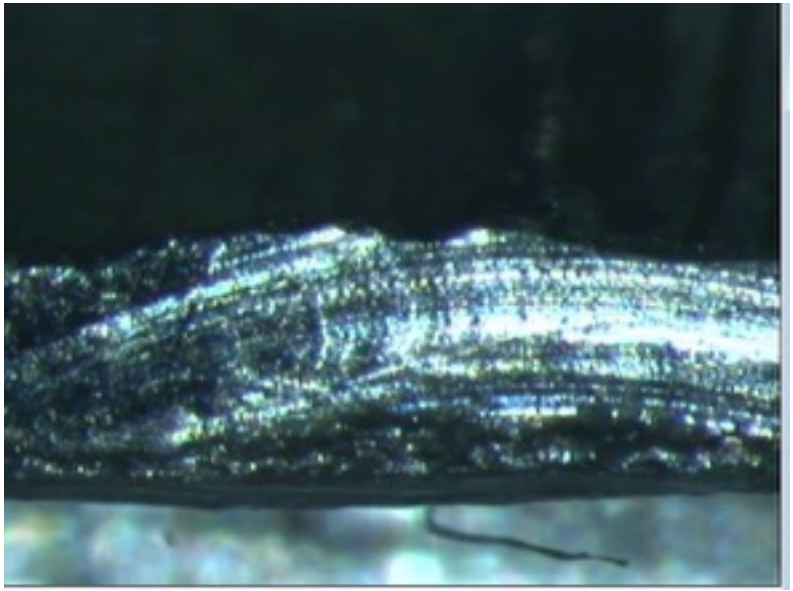

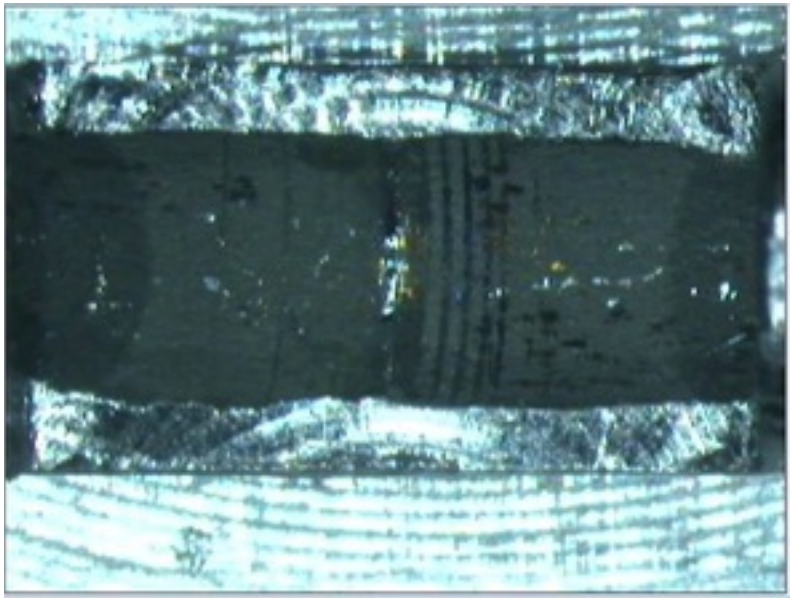

Summary

- All necessary parts prepared by MPI and CERN and delivered to DESY
- Orbital welding machine delivered and welding parameters optimized
- Production will start now
- According to current schedule 12 CO_2 flex lines will be installed and commissioned in December

Helium Pressure Tests for ATLAS IBL after Assembly

Claudio Bortolin : Forum on Tracking Detector Mechanics 2015

Helium Pressure test: we pressurized the liquid and gas pipes and looked for any leak with vacuum hoses connected to a leak detector

Caps

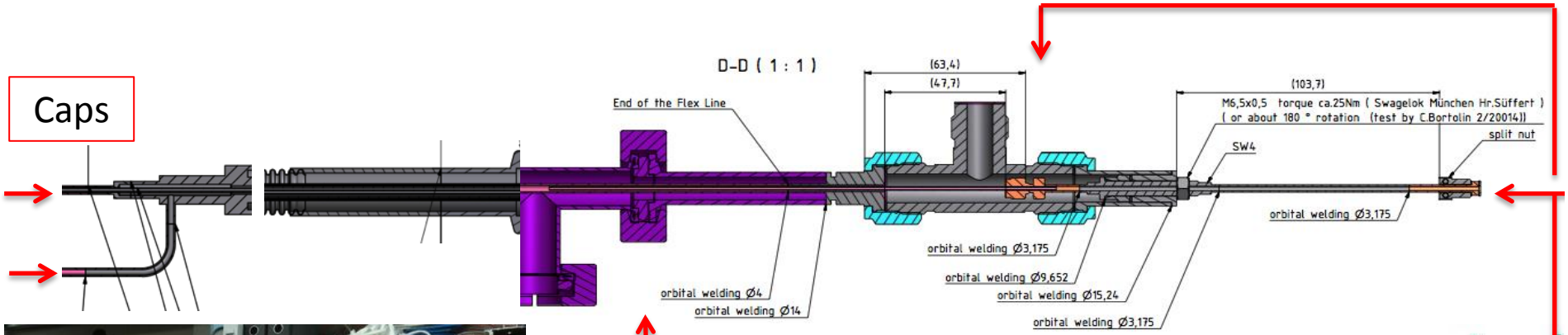

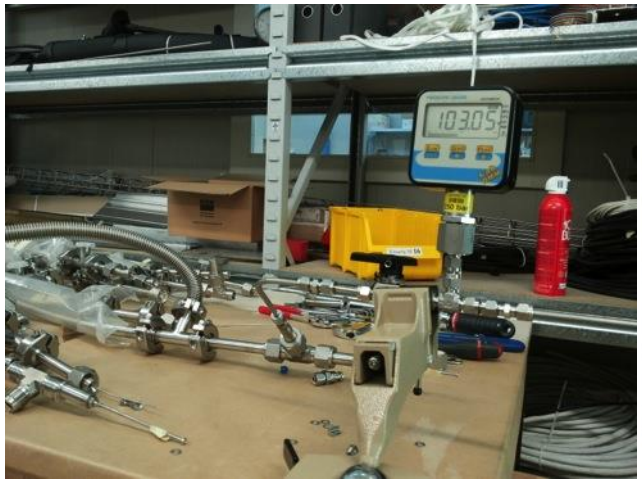

Helium Bottle

Leak rates measured:
8×10^{-9} to 2×10^{-8} mbar l/s

Helium leak detector

Leak and Pressure Test Procedure at ATLAS IBL

Claudio Bortolin : Forum on Tracking Detector Mechanics 2015

1) Pre-positioning of the lines

2) Tightening of the rotatable conn.

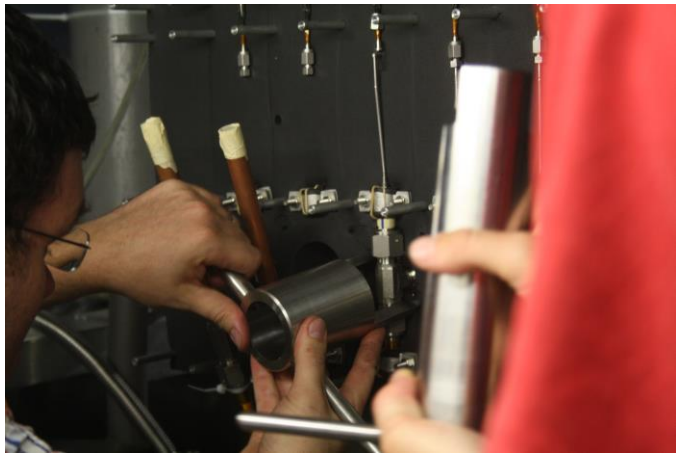

3) Pressurizing with helium

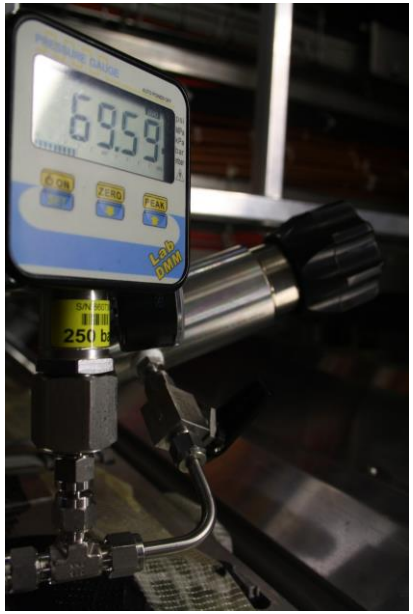

4) Leak search with a sniffer

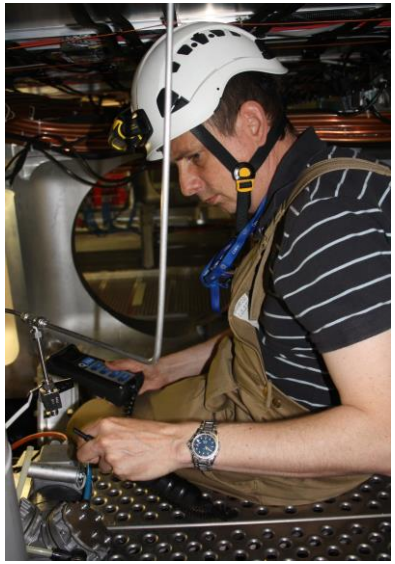
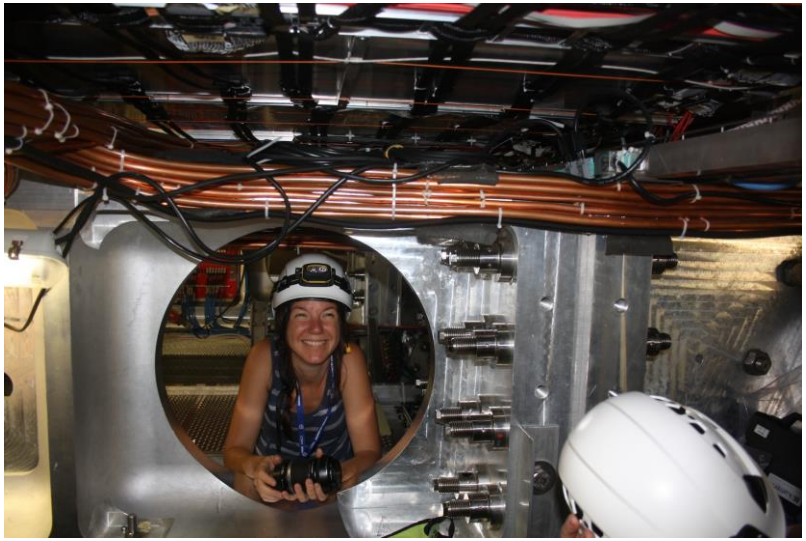
5) No leaks!