Status of AIM

Dummy VXD installation preparation

10th VXD Belle II Workshop
Santander (Spain), 16.09.2016

Speaker: David Kittlinger

Institute: Max-Planck-Institute for Physics, Munich/Germany

Contact: david.kittlinger@mpp.mpg.de

Overview

- **The CDC mock-up**

- **TEST: VXD transport from the assembly table to mounting tube**
  - Lift up – VXD and crane tool
  - Installation – mounting tube
  - VXD Installation Ring – Manufacturing

- **TEST: VXD-dummy test-installation**
  - Slide-in ledges

- **TEST: Bellow test-installation**
  - Installation panel

- **TEST: Cable alignment / installation**
  - Cable mock-up

Test-Installation at MPI

Revealing tests at the CDC-mock-up at MPI…

…to see what is (im)possible!

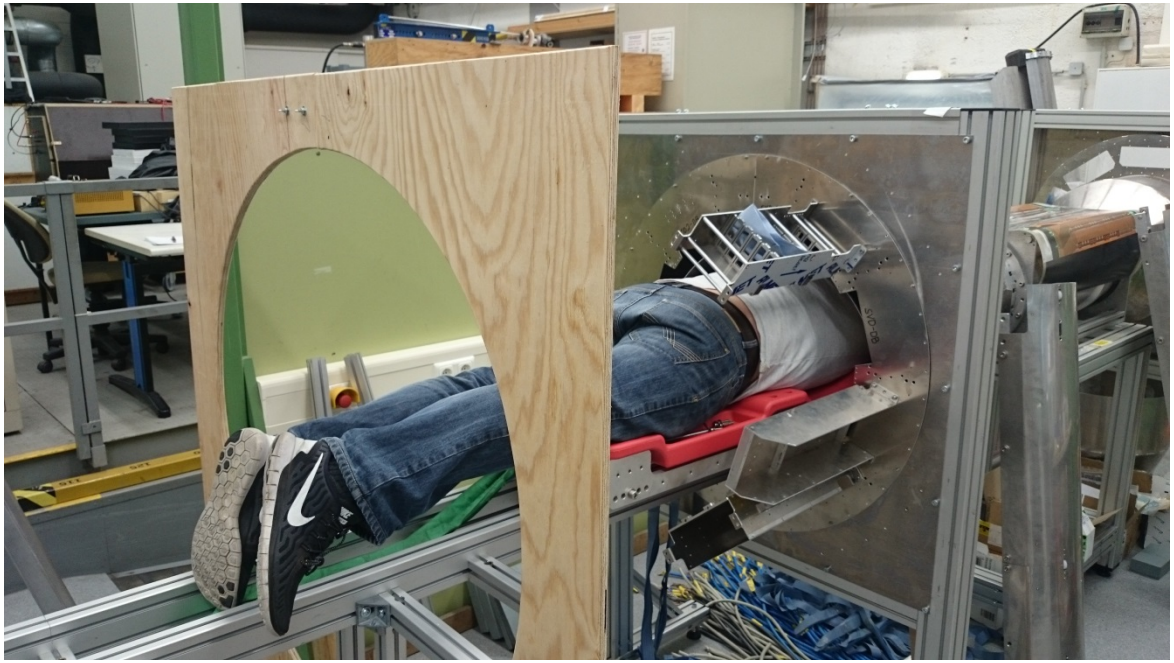

CDC mock-up

Setup was completed and first tests were done.

- Installation of the **mounting tube** ☑
- **Crane handling** of the VXD-crane-tool on the mounting tube ☑
- **VXD installation** (slide in + fixation) ☑
- Installation of the **installation panel** ☑
- **Cable laying**
- Installation of the **bellows** ☑

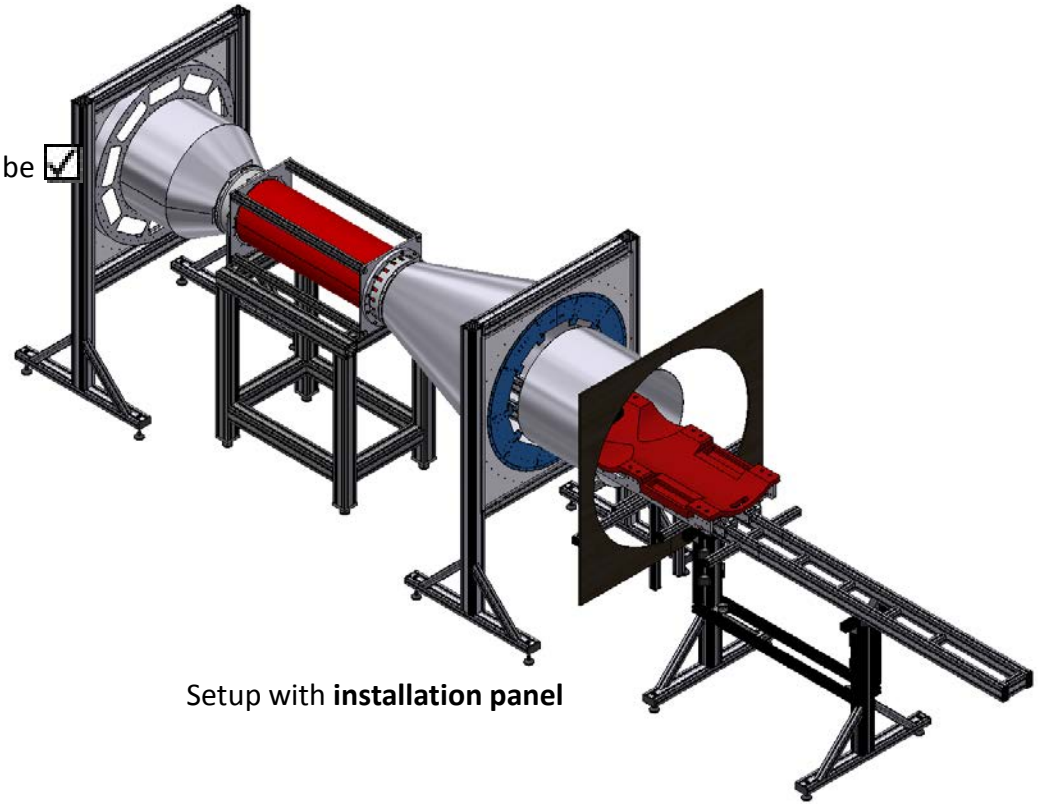

Setup with **installation panel**

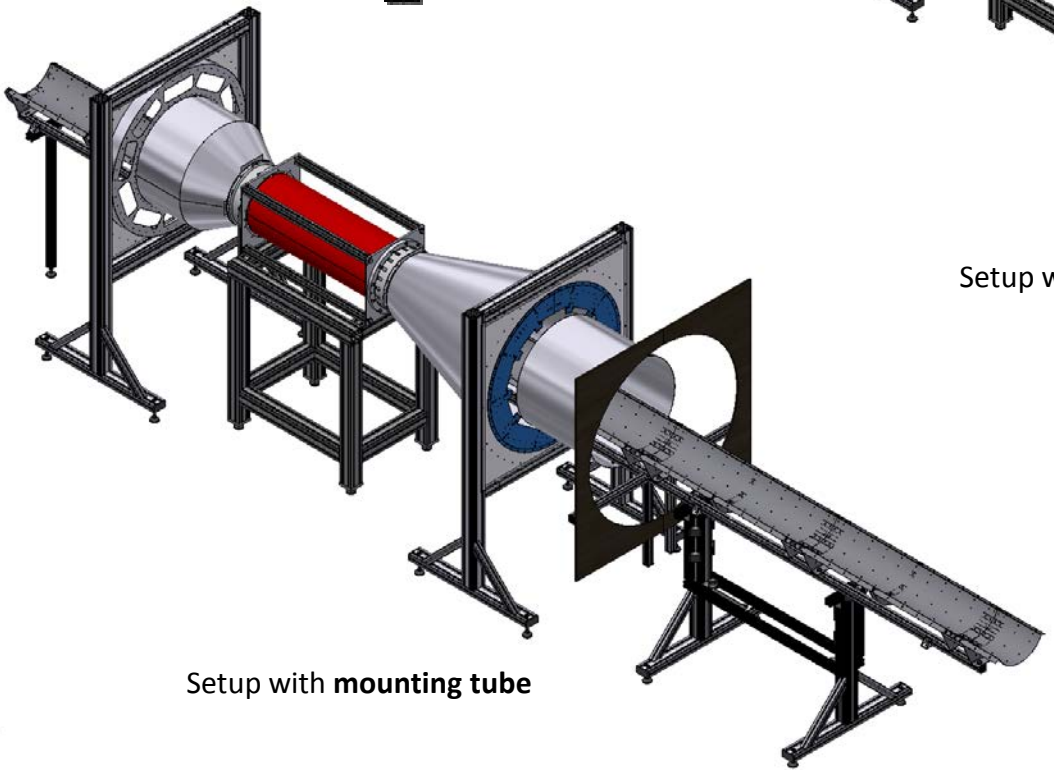

Setup with **mounting tube**

Switching setup in less than **30 mins** !

TEST: Transport of the VXD

from assembly table to mounting tube

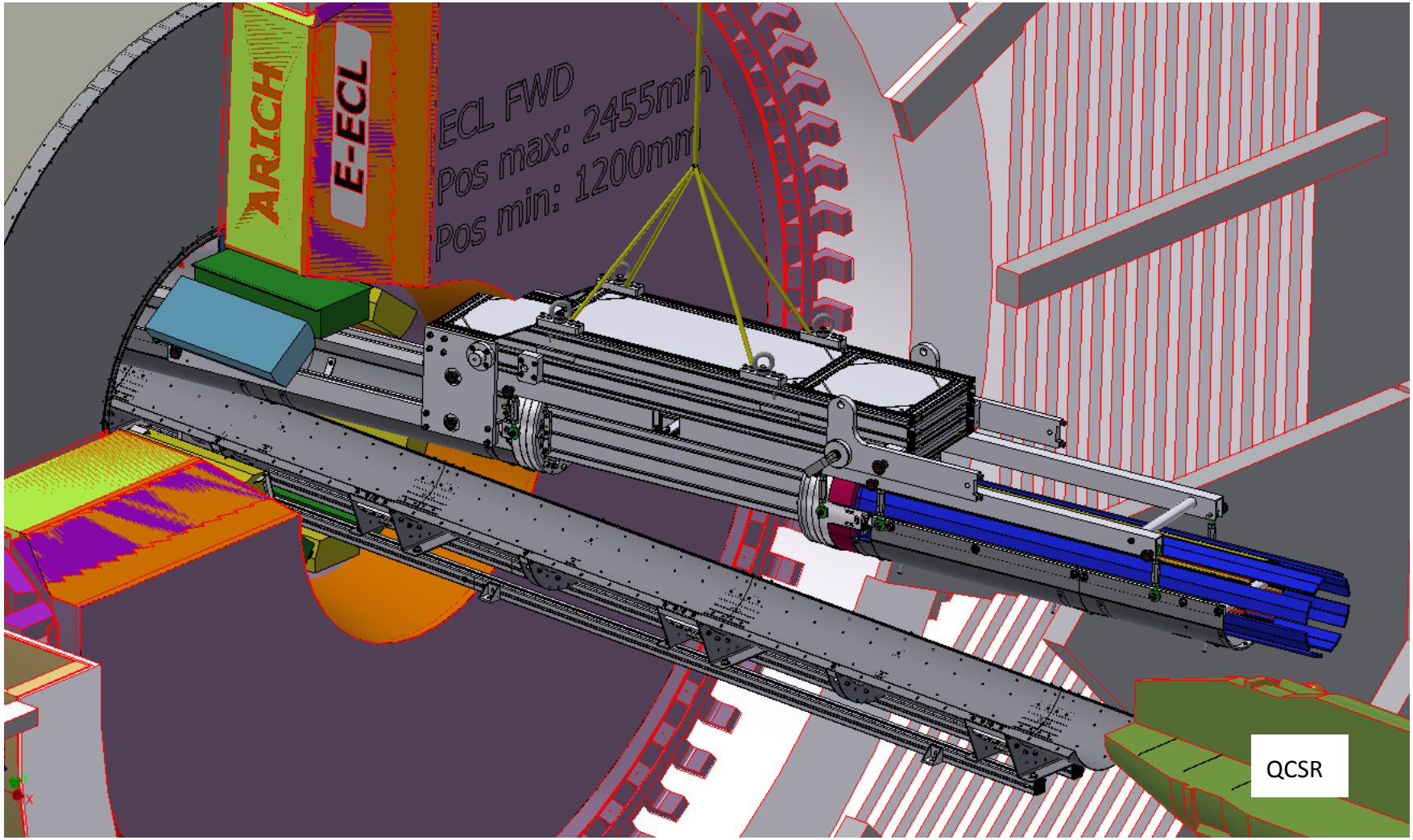

How to **maneuver** the **VXD** with the **crane tool** between the **ECL** and the **QCSR** and put it on the **mounting tube**?

Lift-up

VXD with crane tool

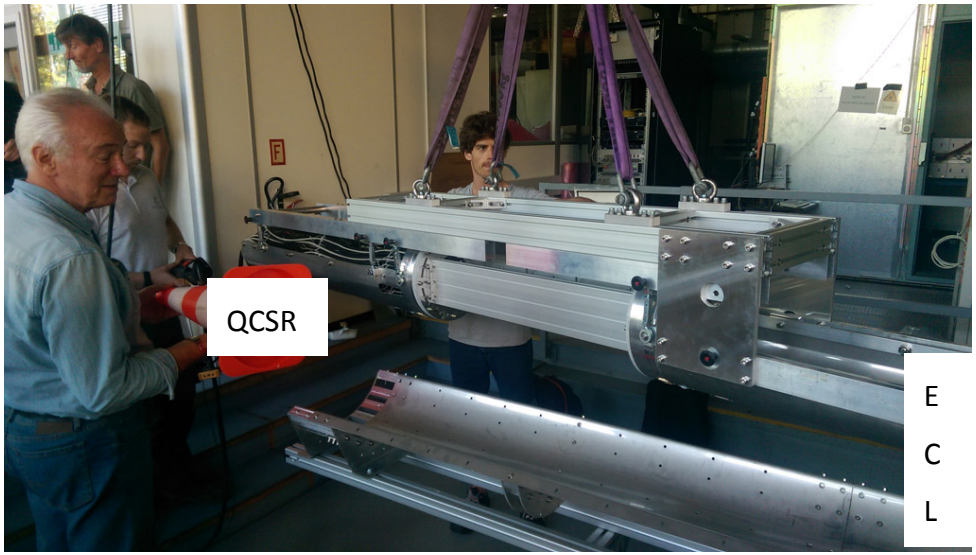

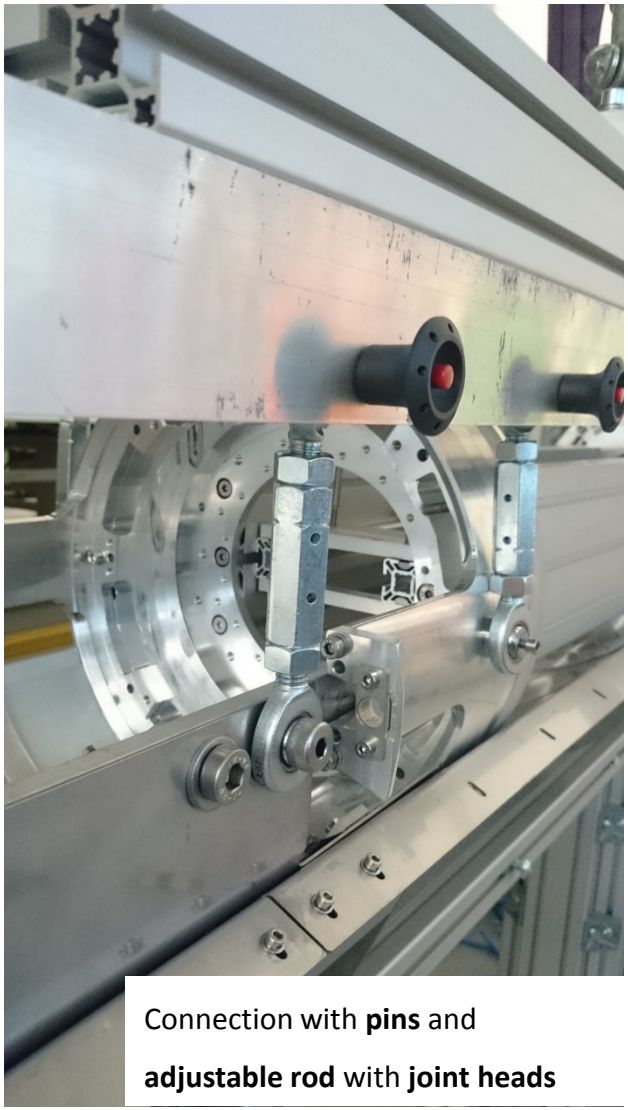

Installation - mounting tube

Put MT on CDC-inner-ring-FWD and support-plate (white)

-> 2-point-support

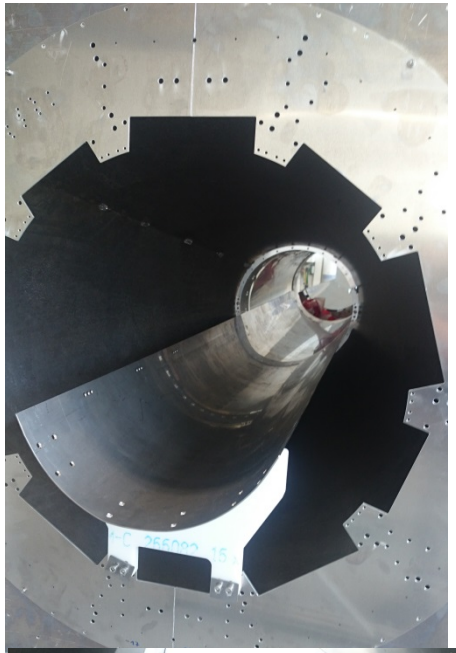

Push the MT inside till it reaches the CDC-inner-ring-BWD

-> 3-point-support

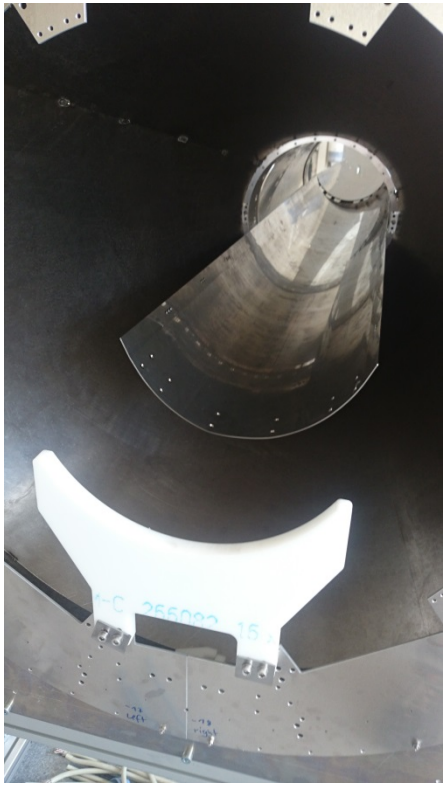

Last push of the MT on CDC-inner-ring-FWD and CDC-inner-ring-BWD

-> 2-point-support

Connection mounting tube / detector

MT inside the CDC

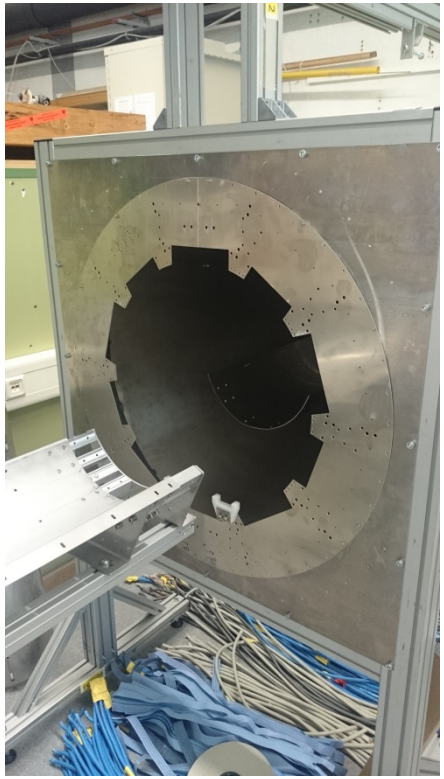

Support plates are assembled !

MT-extension is waiting to slide in

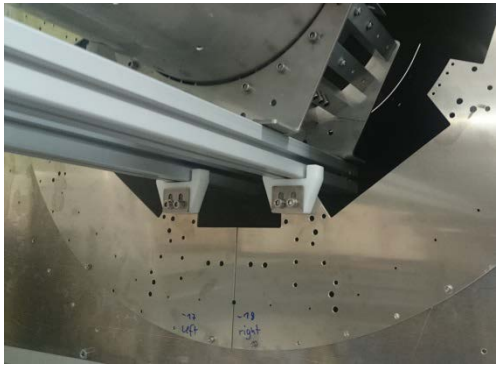

MT-extension sits on the support plate

Final mounting tube assembly

MT and MT-extension

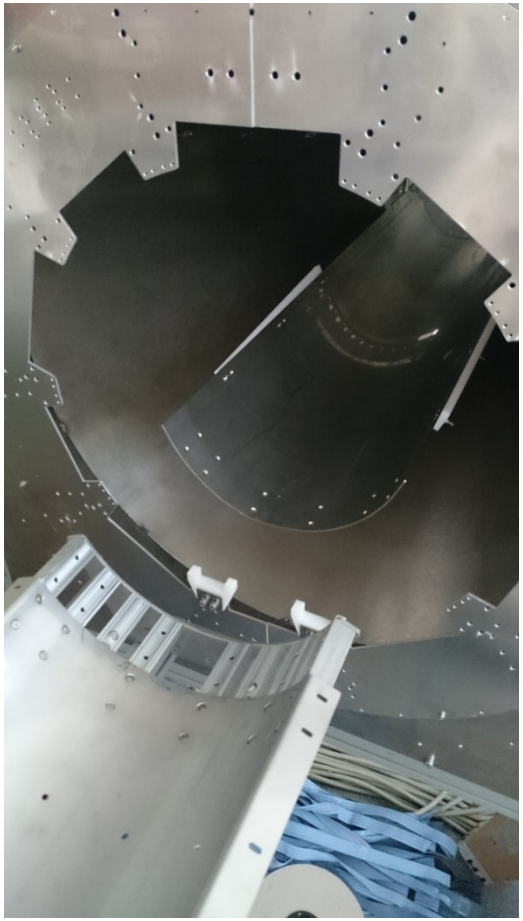

Insert the MT in the CDC that the end on the FWD-side can be reached

Connect the MT with the MT-extension on the FWD-side

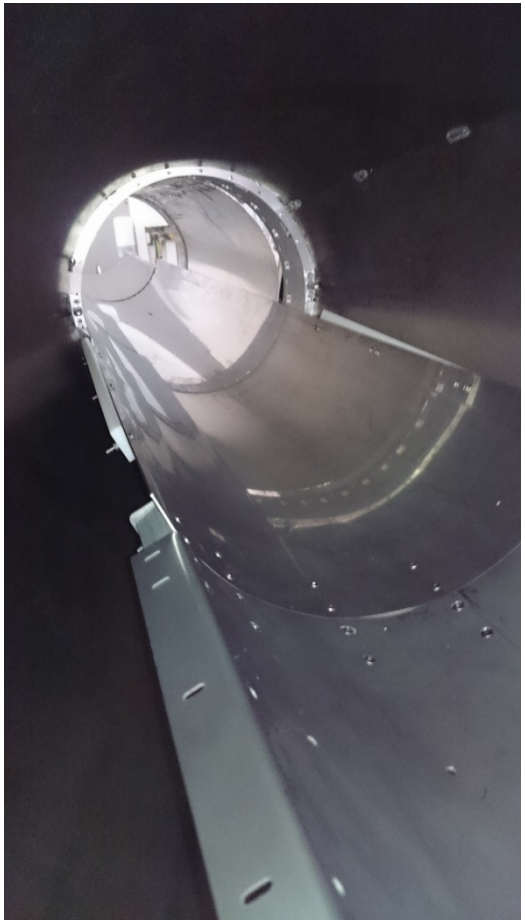

Push the MT with the connected MT-extension into the CDC

NEW: mounting tube connection BWD

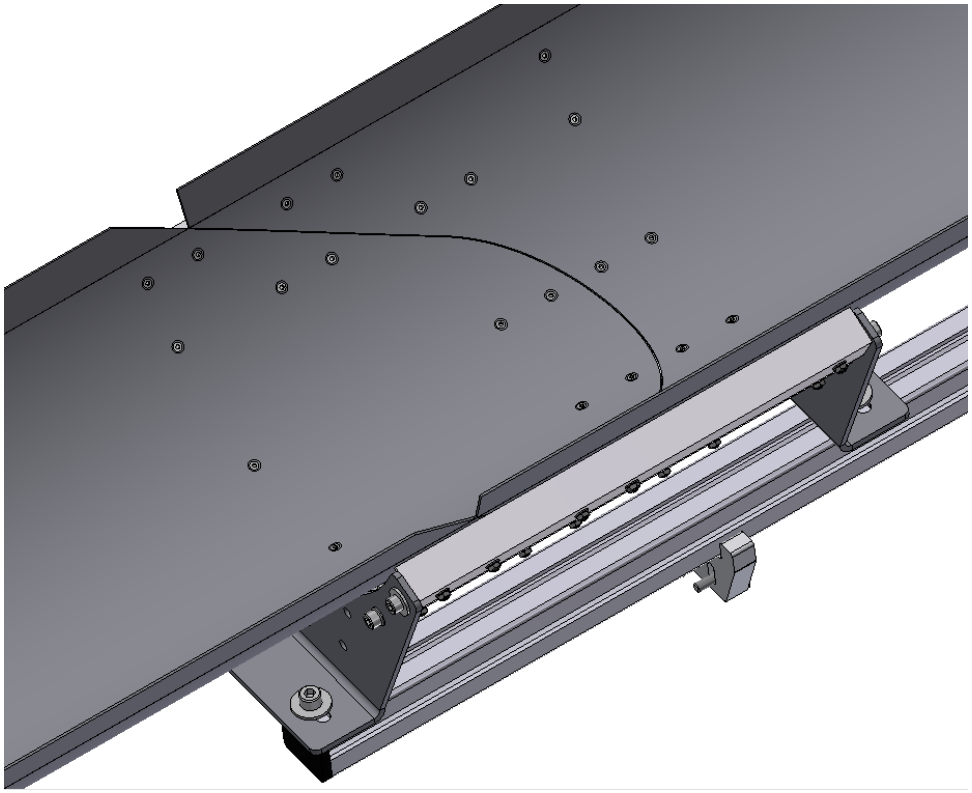

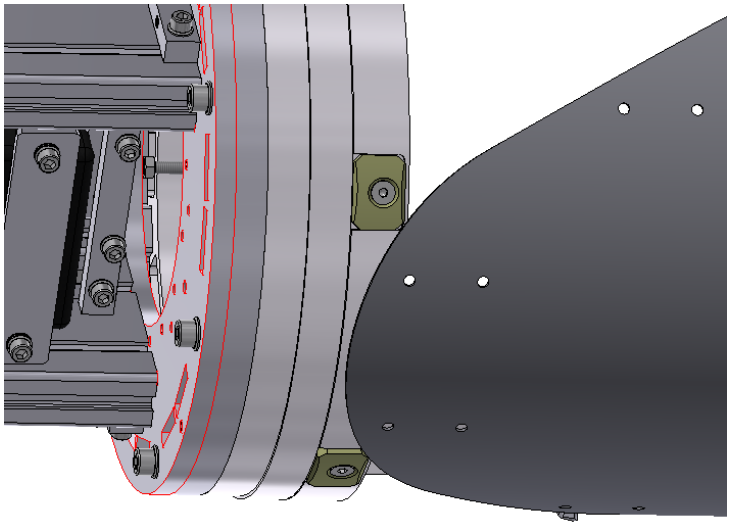

Pointy shape of the **mounting tube** end on the **BWD-side** and

chamfers on the **glide-pads**

to make to **insert-process easier** between the **VXD-installation-ring** and **CDC-inner-ring**.

VXD-Installation-Ring

Challanging **5-axis-simultaneous-milling** for the **VXD-Installation-ring FWD**

at the workshop at **MPI** in Munich.

Whole **production of one ring** can be done NOW within **2 days** – thx to our MPI-manufacturing team !!!

Connection VXD-dummy / cable trays

FWD-side

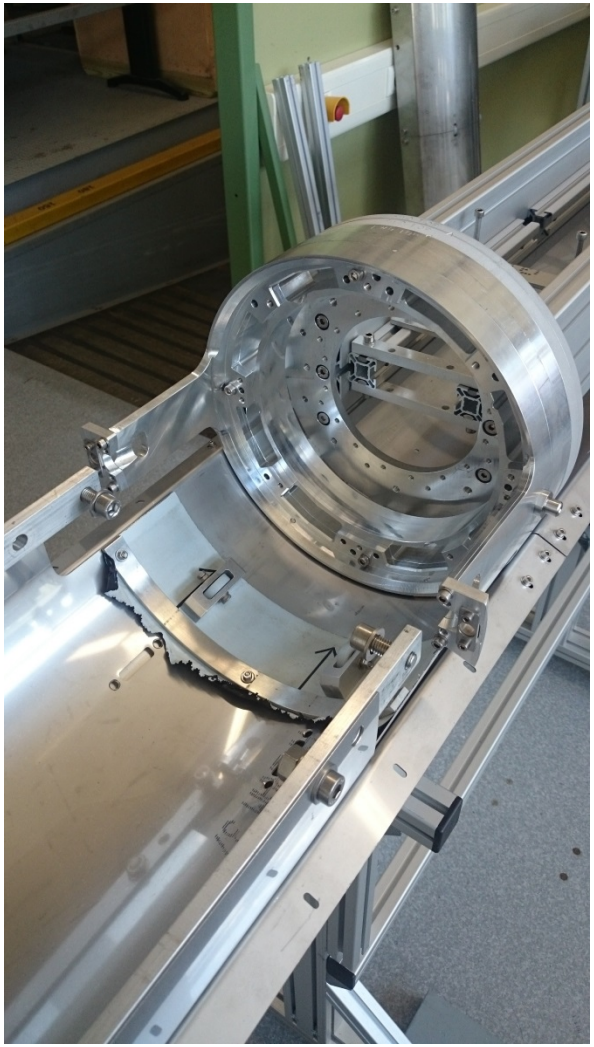

FOR THE TEST: Connected by screws

BUT: Need to be changed because screws **can´t be reached** after installation from the FWD-side

SOLUTION: No screws – apply **only pushing force** from the FWD-side!

Connection VXD-dummy / cable trays

BWD-side

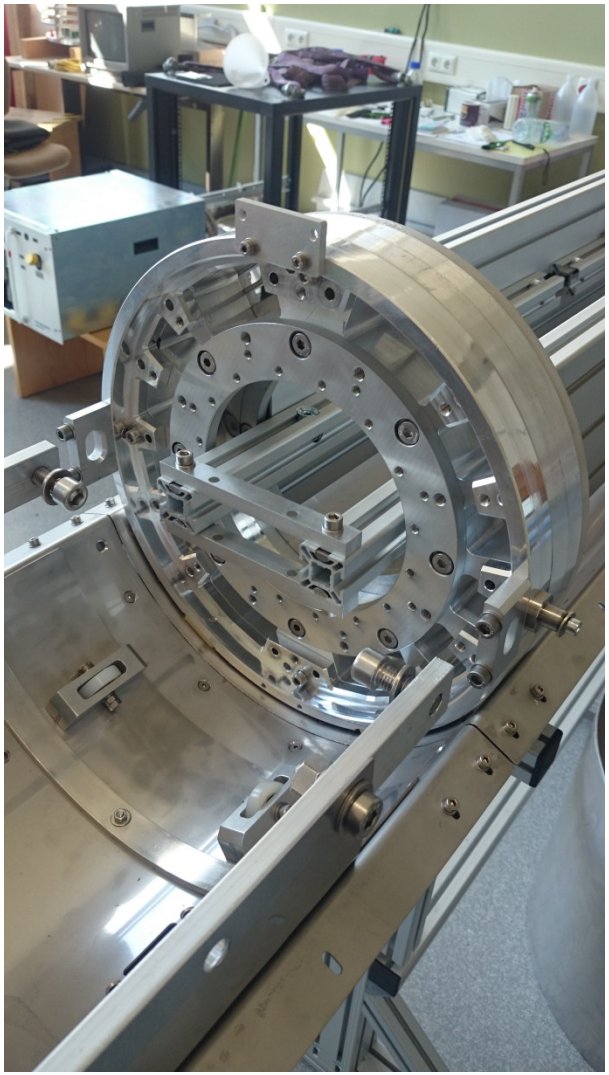

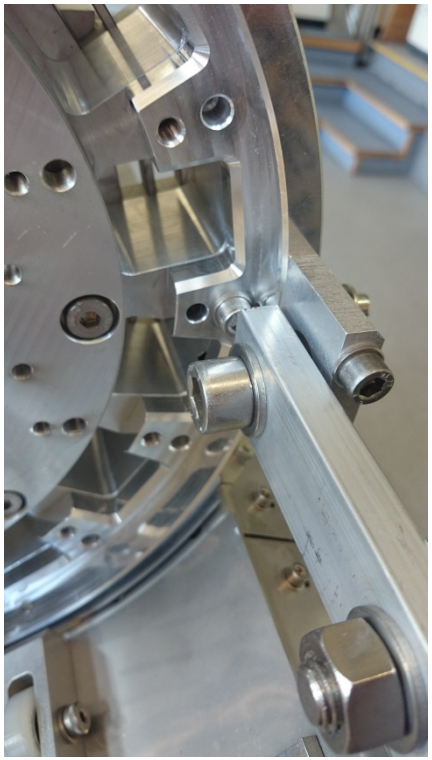

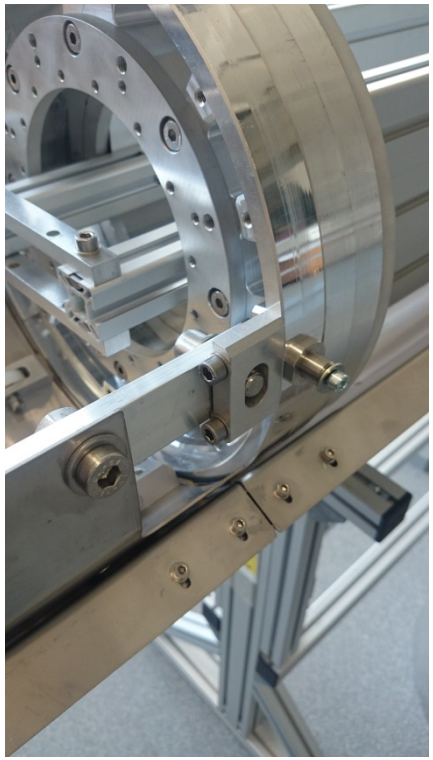

FOR THE TEST: Connected by screws

BUT: Need to be changed because screws **can´t be reached** after installation from the BWD-side

SOLUTION: Leave screws in position – apply **only pushing force** from the BWD-side to extract VXD.

TEST: VXD-dummy installation

Testing the procedure:

- **Slide in** the VXD-Dummy -> mounting tube, glide pads
- **Align** the VXD-Dummy & CDC in the horizontal plane -> slide-in-ledges, guide-pins
- **Mount** the brackets on the BWD side -> brackets, pins

DONE !

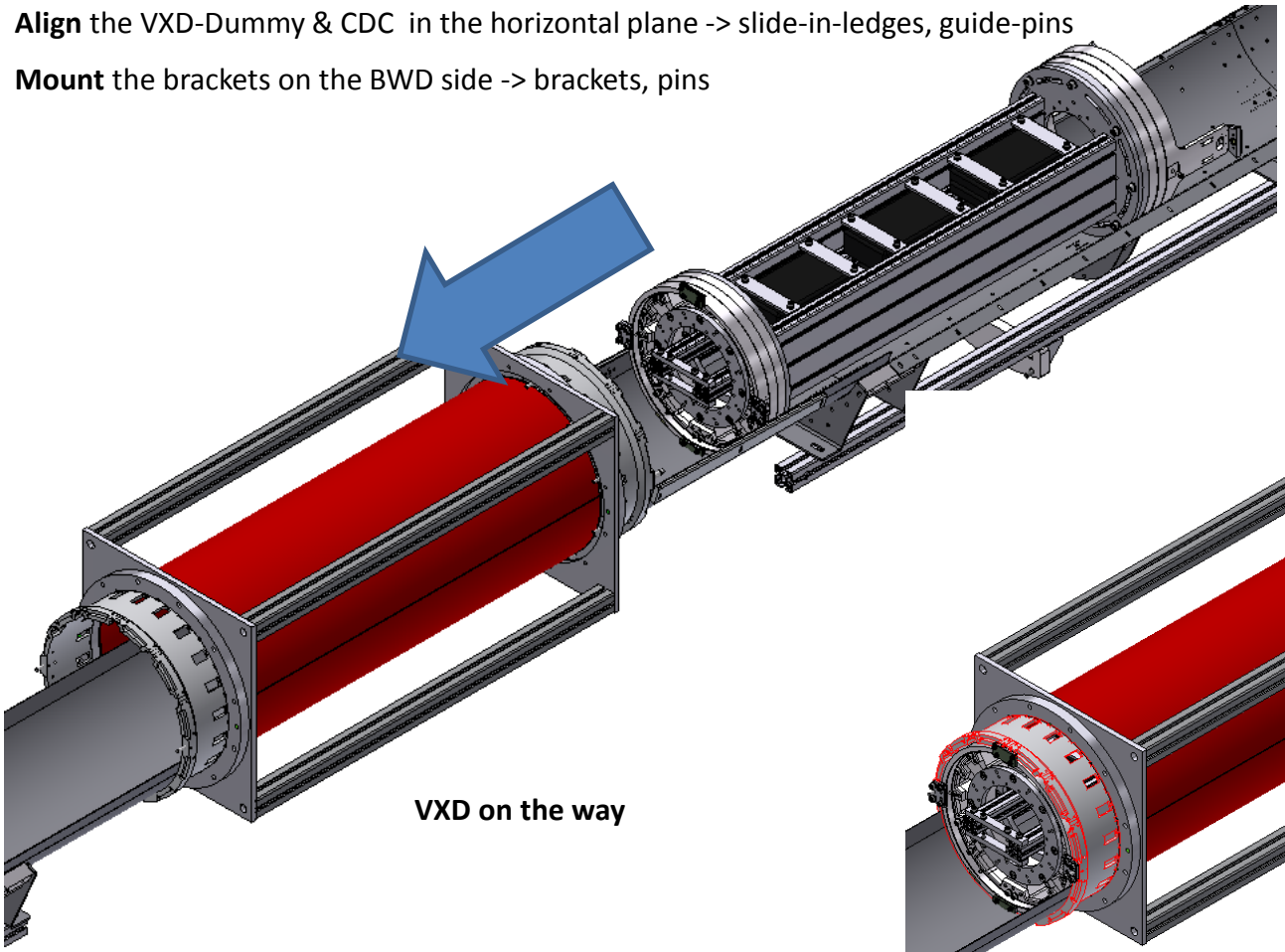

VXD on the way

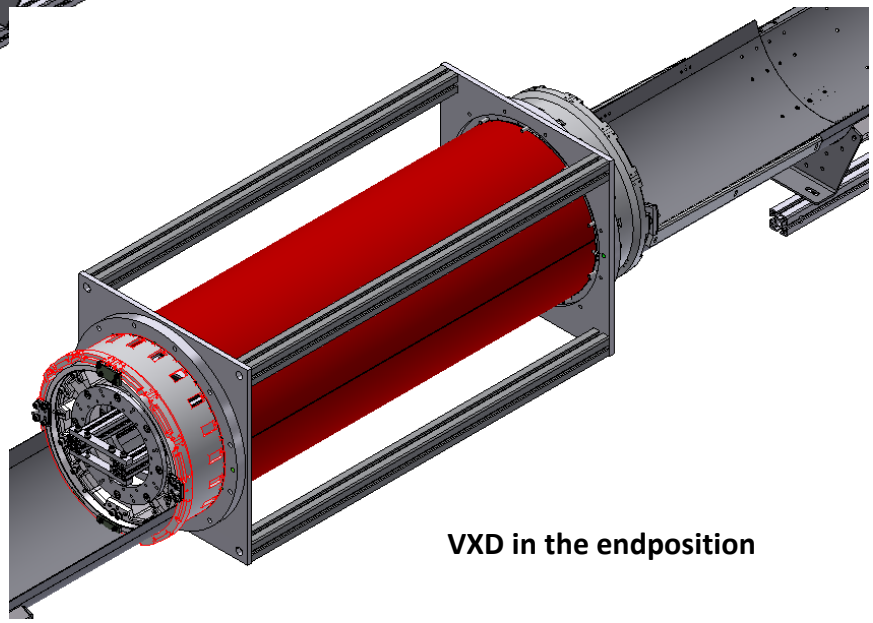

VXD in the endposition

Slide-in-legdes

Align the VXD to the CDC on the FWD-side

Slide-in-ledges

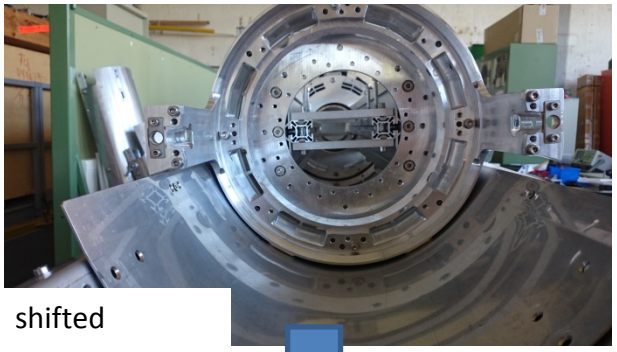

shifted

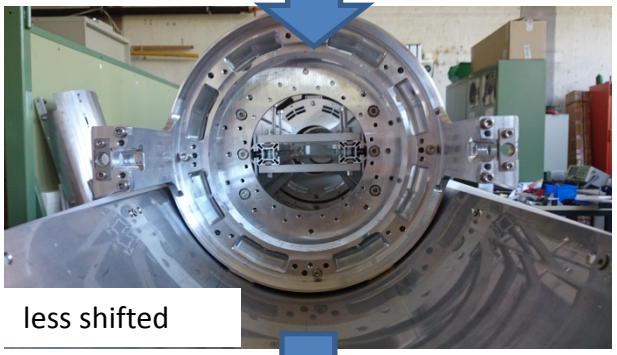

less shifted

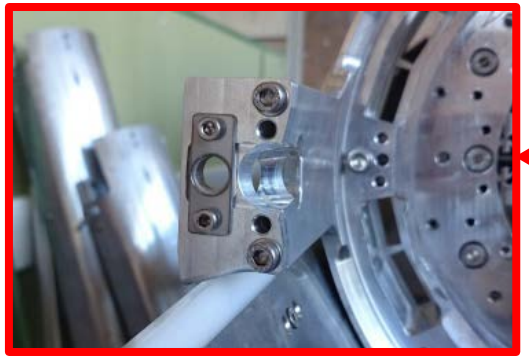

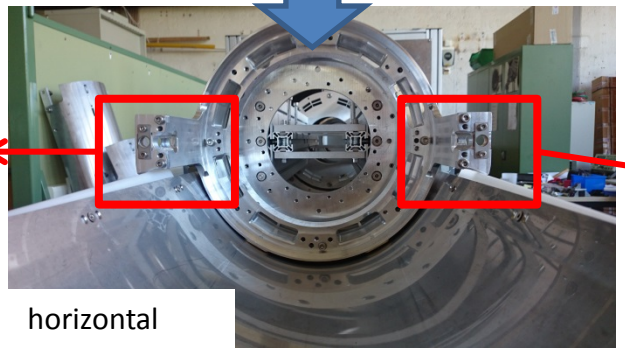

horizontal

Slide-in-legdes

Align the VXD to the CDC on the FWD-side

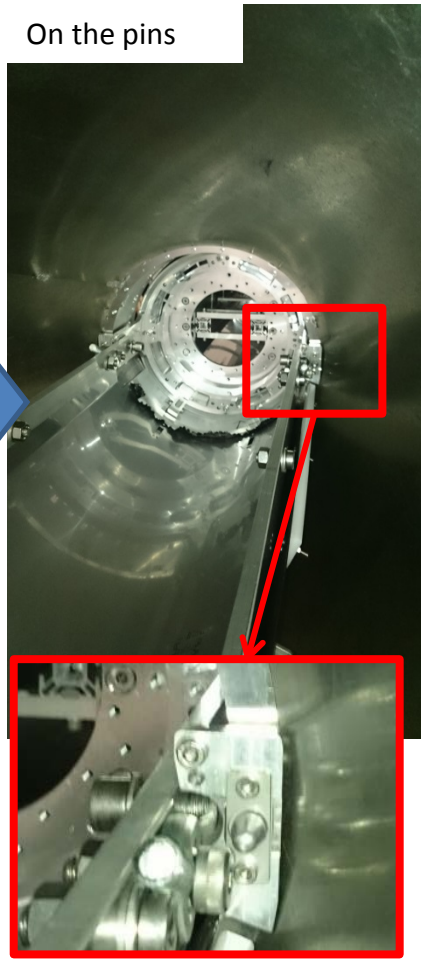

TEST: Bellow installation

General: The **bellows** will connect the **beampipe** between the **VXD** and the **QCS**

Test: There will be a **test-Installation** of the bellows at the VXD/CDC-mock-up @ MPI:

- Connect the **RVC-connection-shield** to the bellows
- Connect Flexlines and
- **Original bellows** (from DESY RVC-test-setup) were used
- Very **sensitive area** (beampipe, sensors) with **restricted space** (patch panels with cables) that is **not easy to reach**.
- The test was be done by Karsten Gadow (DESY)

DONE !

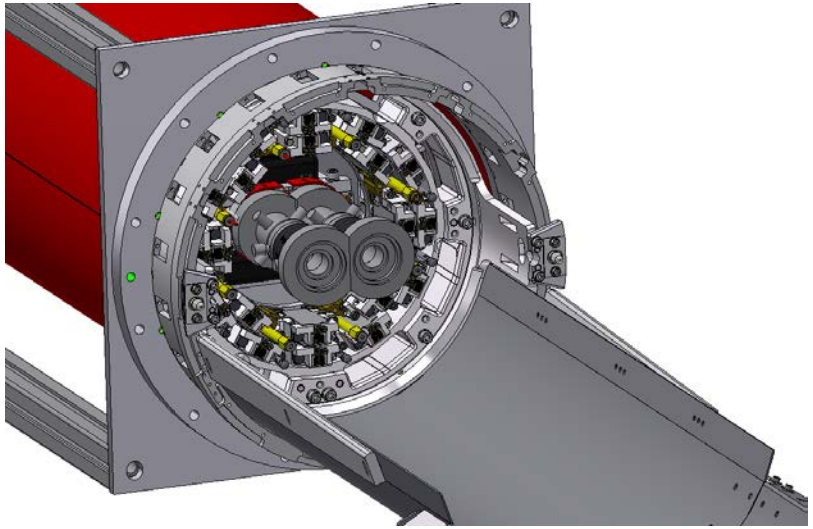

Mock-up from the FWD-side

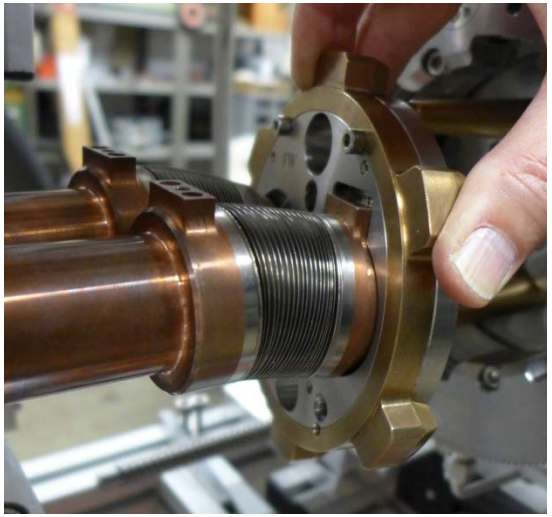

Pictures from the test

Installation panel

Constricted room for installation

TEST: Cable alignment/installation

NOT DONE YET !

General: The **cables** will be laid from the **VXD** to the **dockboxes**

Test: There will be a **test-Installation** with a new cable-mock-up at the VXD/CDC-mock-up @ MPI:

- How to **reach and fix** the position of the cables in the CDC-cone
- How to **connect** the cables to the dockboxes
- Quality of the cables – **shape** and **flexiblity**

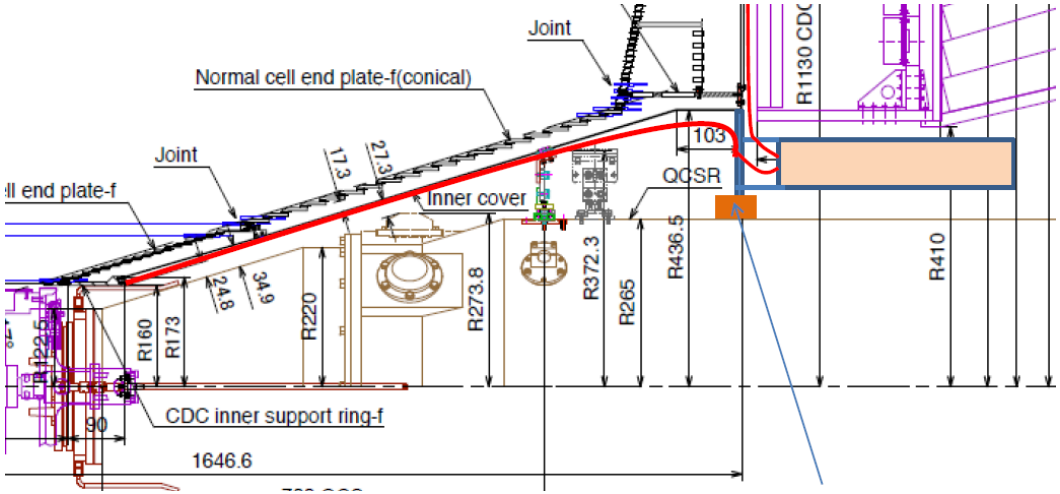

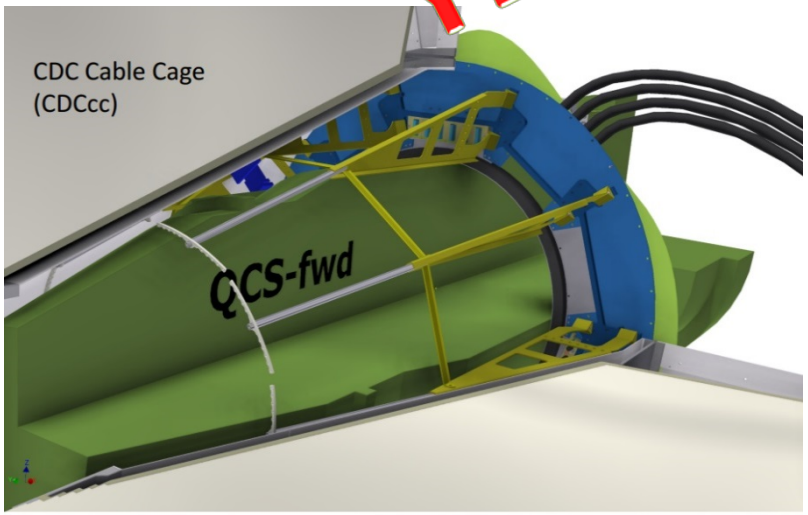

Cable Mock-up

Power-, Infiniband-, and CAT7-cables

CABLE ROLL with Power-, Infiniband- and CAT7-cables

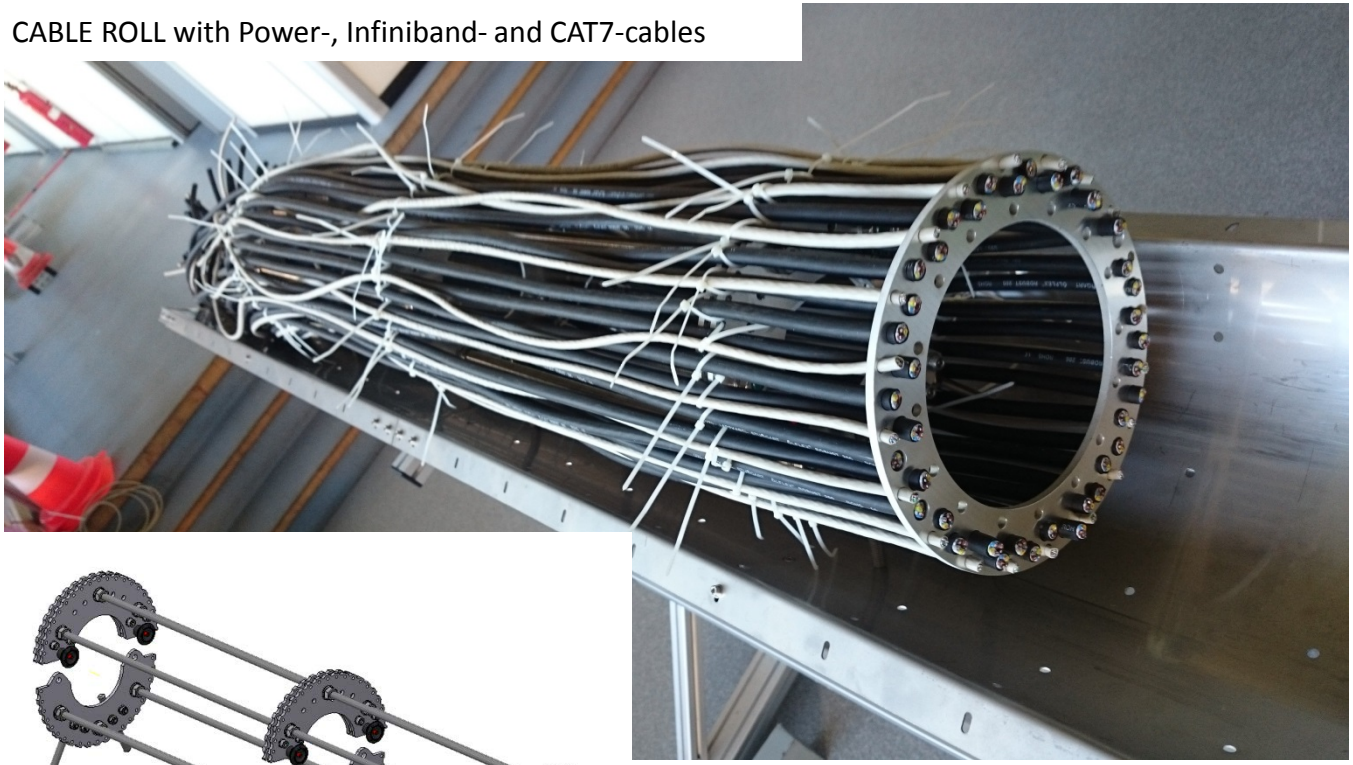

Connection by cable ties

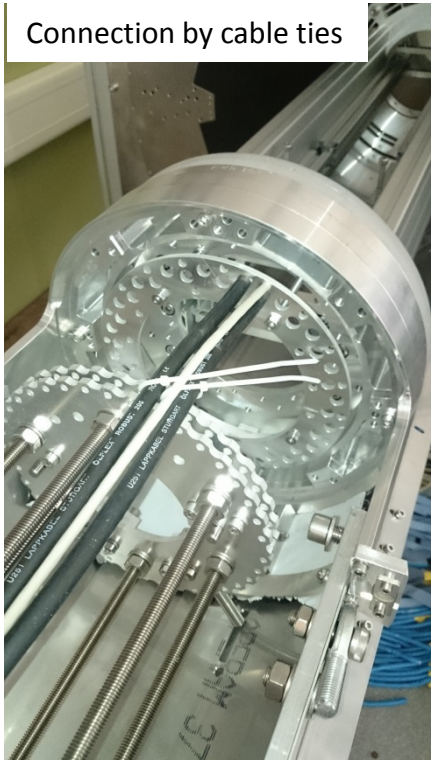

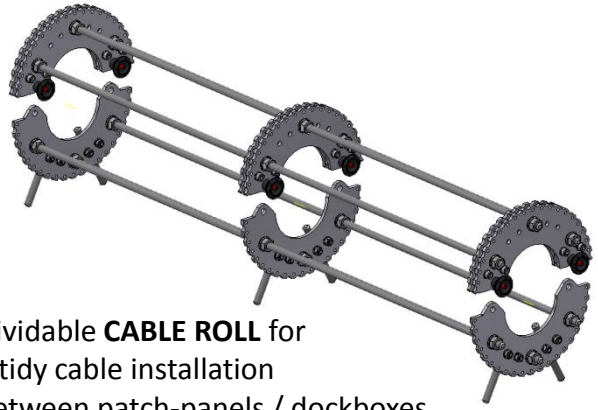

Dividable **CABLE ROLL** for
a tidy cable installation
between patch-panels / dockboxes

Problems / Solutions

Problem	Solution
Insert and extract of the mounting tube	- New shape of the mounting tube - Chamfered glide pads - Exact positioning of the support plates
Connection of the mounting tube / mounting tube extension	- Using threads for the connection
Connection of the VXD / Cable trays	- Don´t hook in with the screws - Only using push forces
Connection of the VXD / CDC BWD	- Reducing amount of pins from 2 to 1 - Needs to be confirmed by KEK

Next

- Perform a full **cable laying test** between patch-panels and dockboxes
- **Fix problems** and manufacture new parts
- **Ship installation equipment** to Japan (beginning of Nov. 2016
- Perform **installation test** with VXD-Dummy **at KEK** on the detector (approx. 20th Nov 2016)

Thank you for your attention!

Do you have any questions?

Speaker: David Kittlinger

Institute: Max-Planck-Institute for Physics, Munich/Germany

Contact: david.kittlinger@mpp.mpg.de

Attachment

VXD-alignment

FWD- to BWD-side at the granite table

sideways

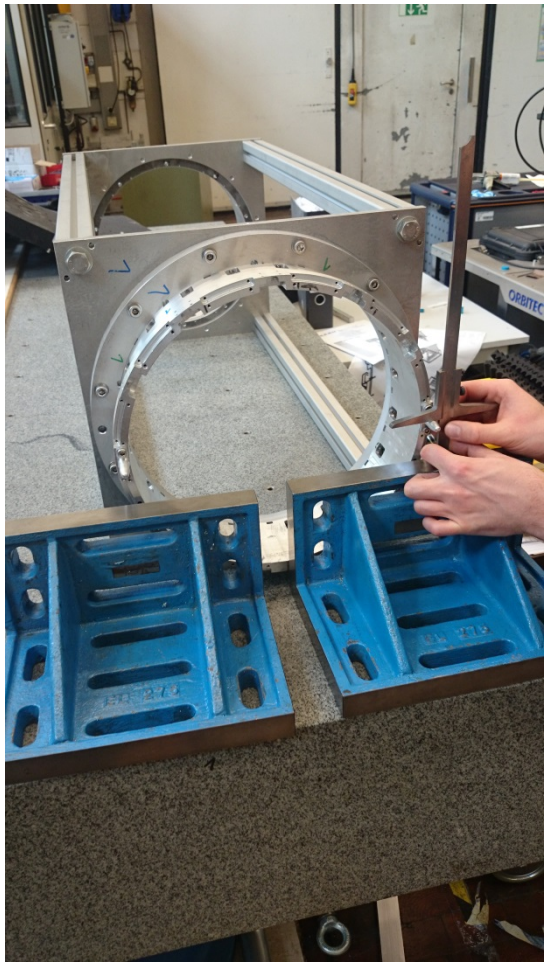

FWD

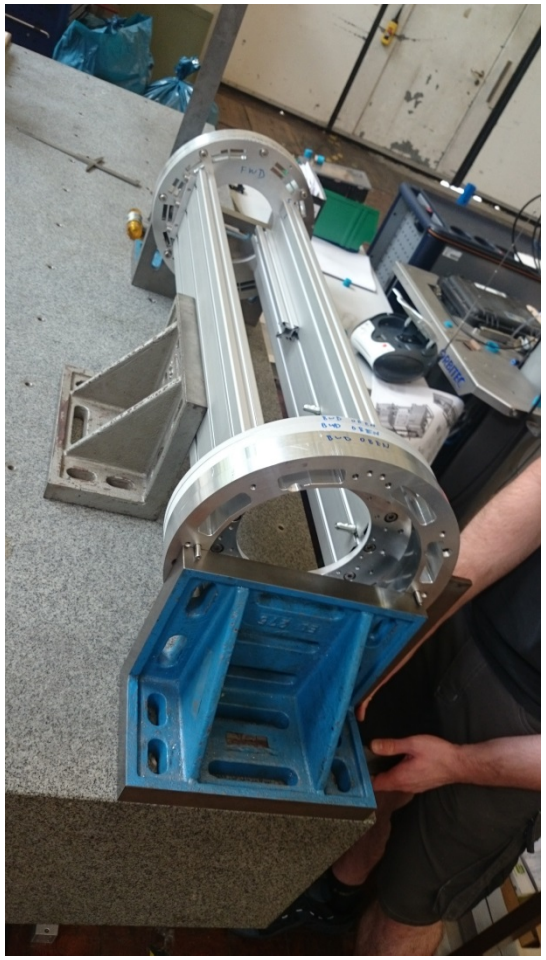

BWD

2nd crane tool for MPI-mock-up

Need for a **2nd crane tool (simplified version)** to practice the put-on-beampipe-procedure

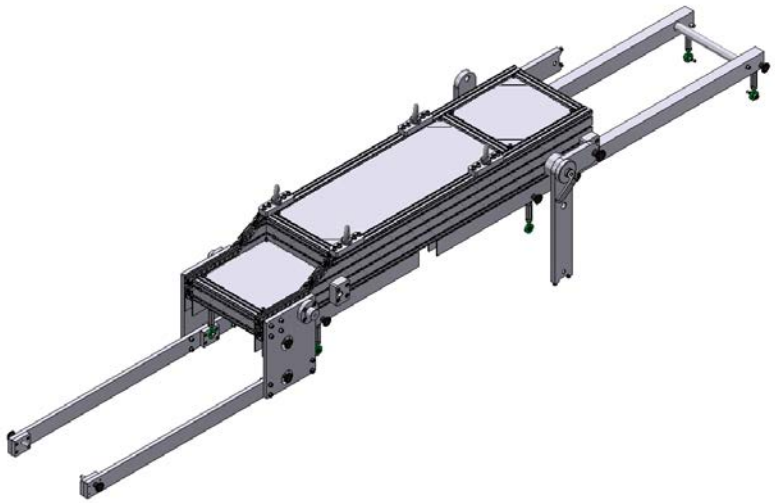

Crane tool at KEK

No sheet metal

Lower profiles without rework

No feet

Screws instead of pins

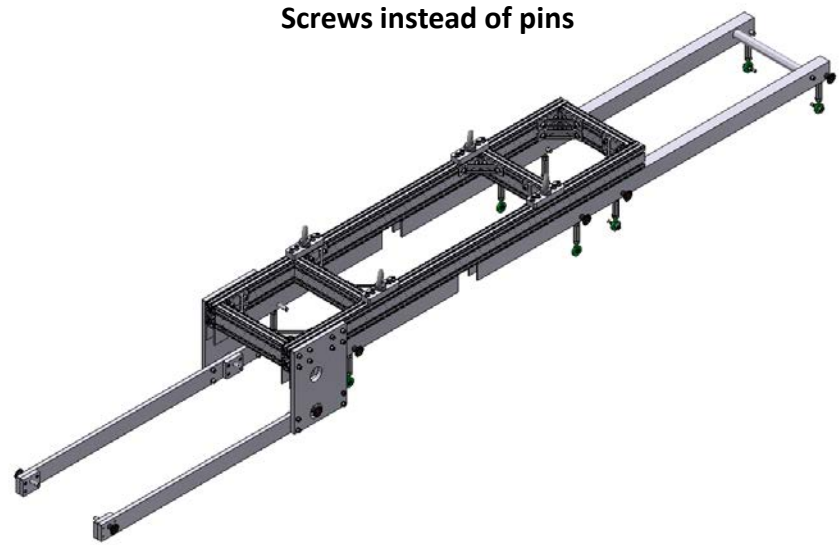

Crane tool for MPI

Mounting tube support plate

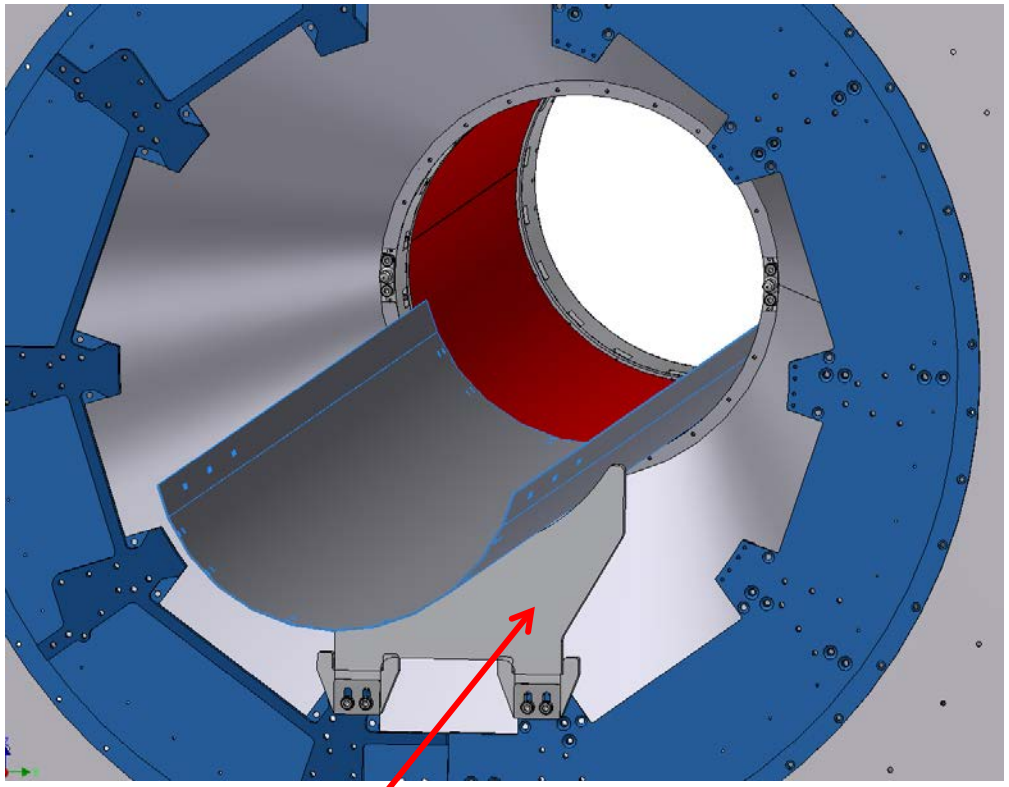

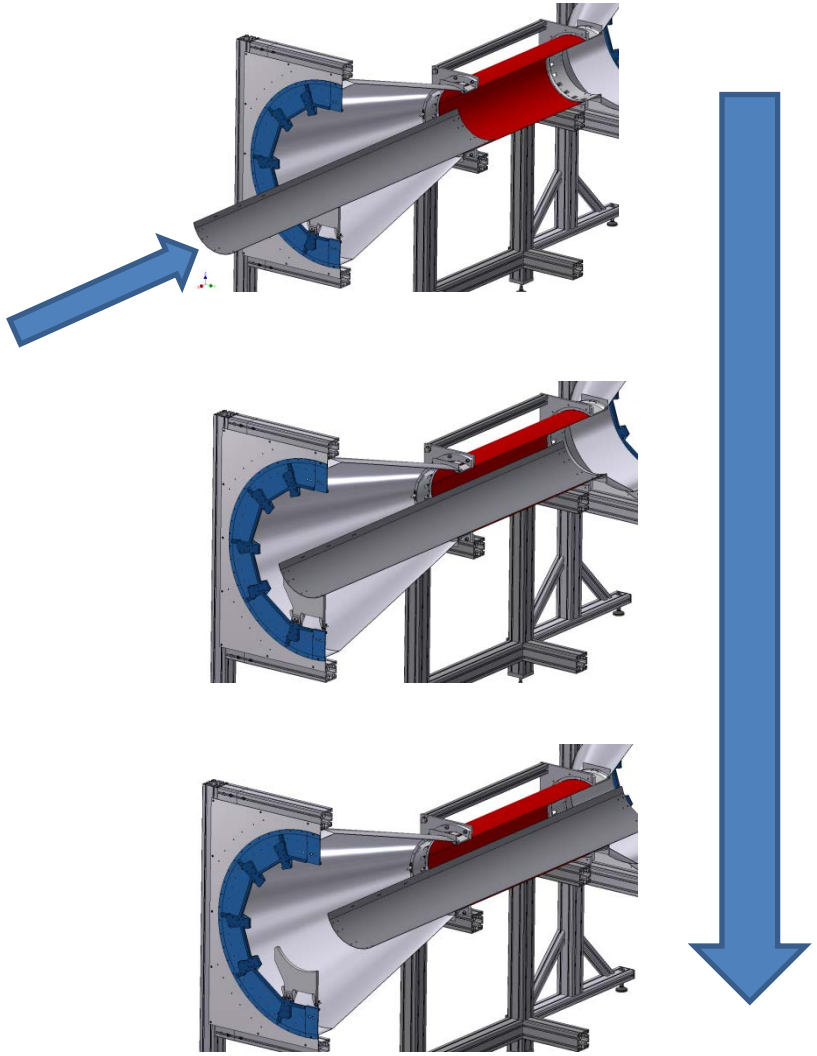

Plastic plate to guide the mounting tube during the slide-in-process to **avoid hitting** the **CDC-inner-cylinder**

cable trays

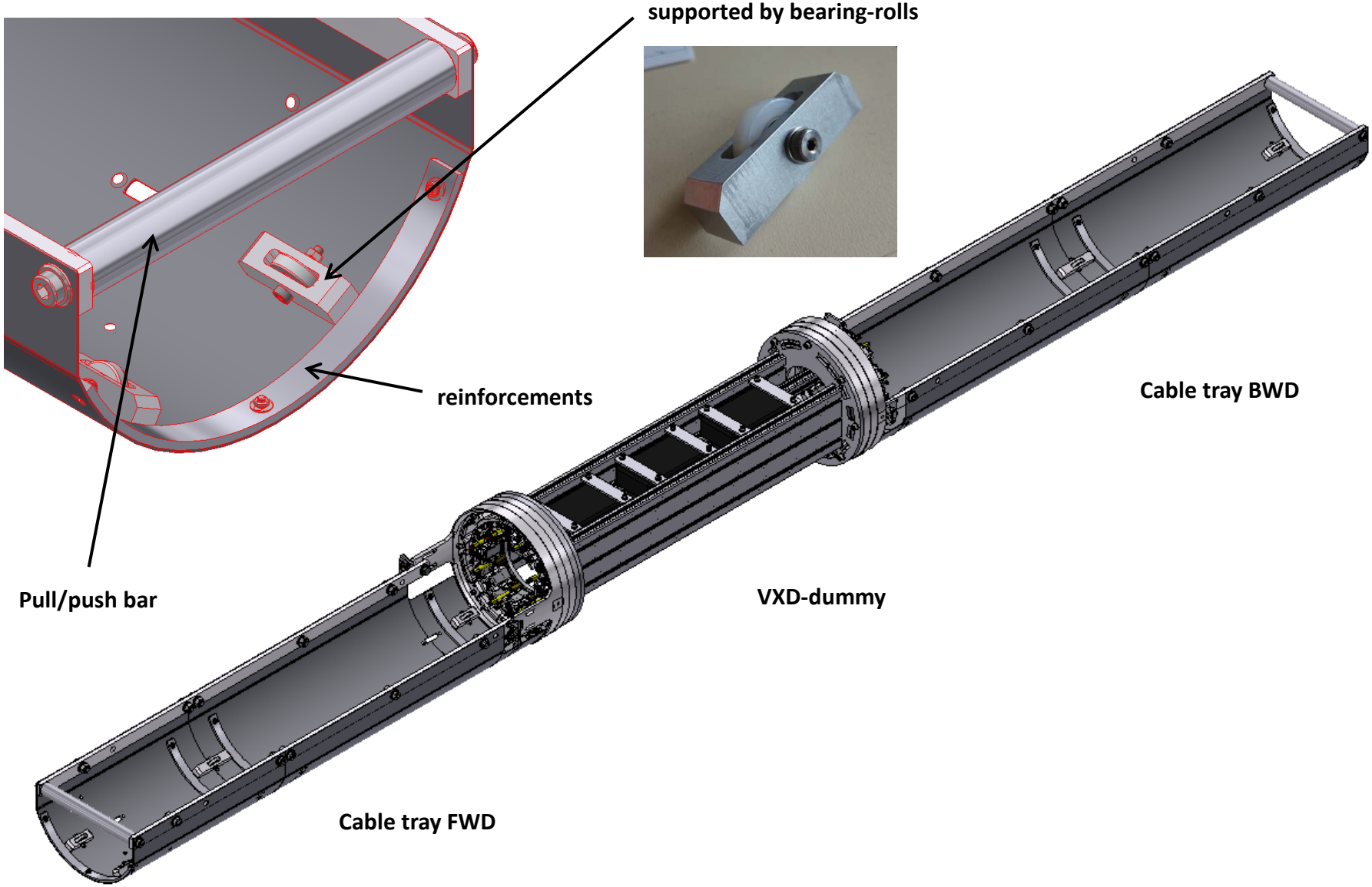
supported by bearing-rolls
reinforcements
Cable tray BWD
Pull/push bar
VXD-dummy
Cable tray FWD