# PXD Assembly and Installation Tooling

T. Ackermann, C. Kiesling

Contents:

- Ladder Mounting Tools and Sequence
- Patch Panel Cable Cage
- CDC Cable Cages (BWD and FWD)
- Reminder on Cable Routing on CDC walls and CDC cone
- Next Steps

# Support of PXD modules for Phase 2

View from the "front"

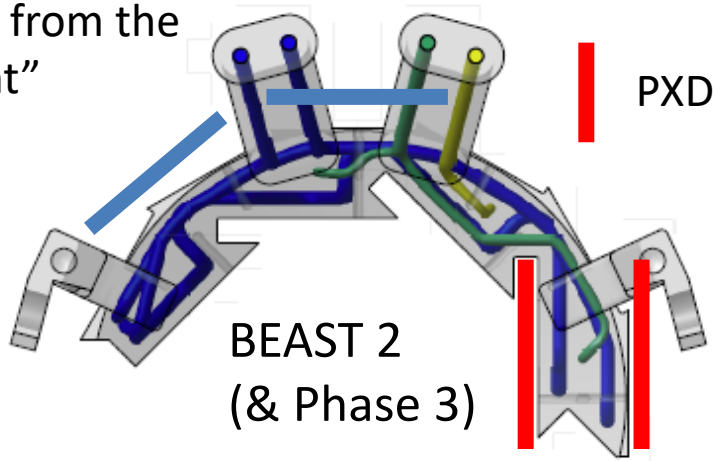


View from the "back"

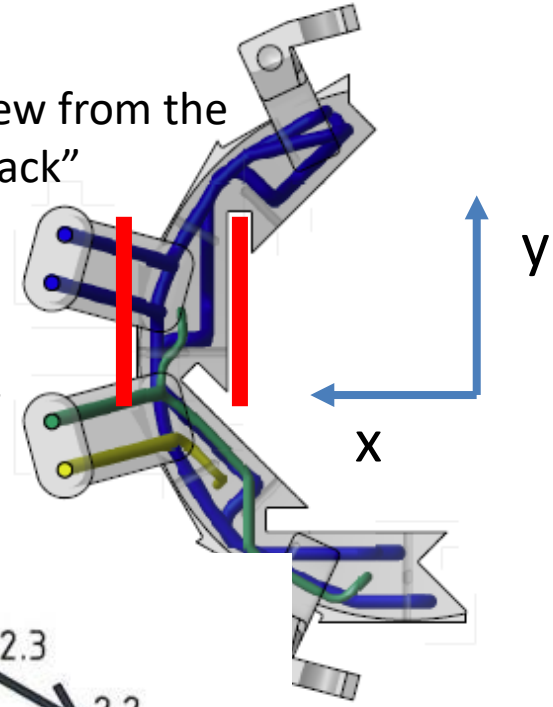


PERSY: SCB rotated by 90° wrt BEAST 2

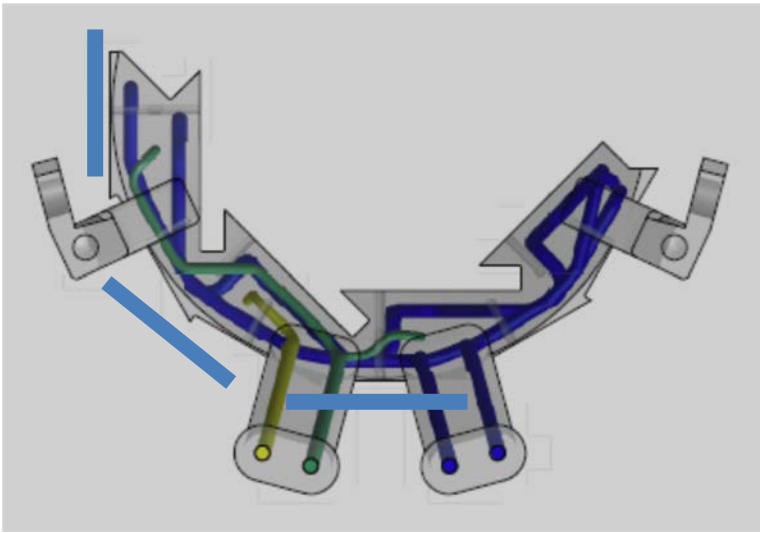

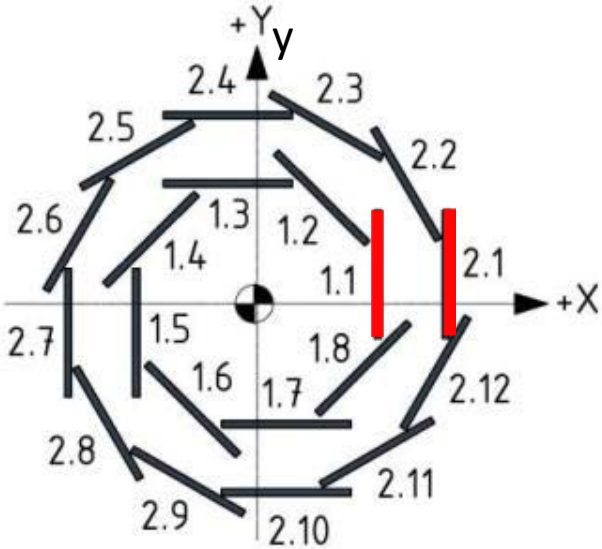

# Phase 2 Ladder Mounting Sequence L1

Ladder liberated from its protections boxes

Transport jig fixed to ground plate

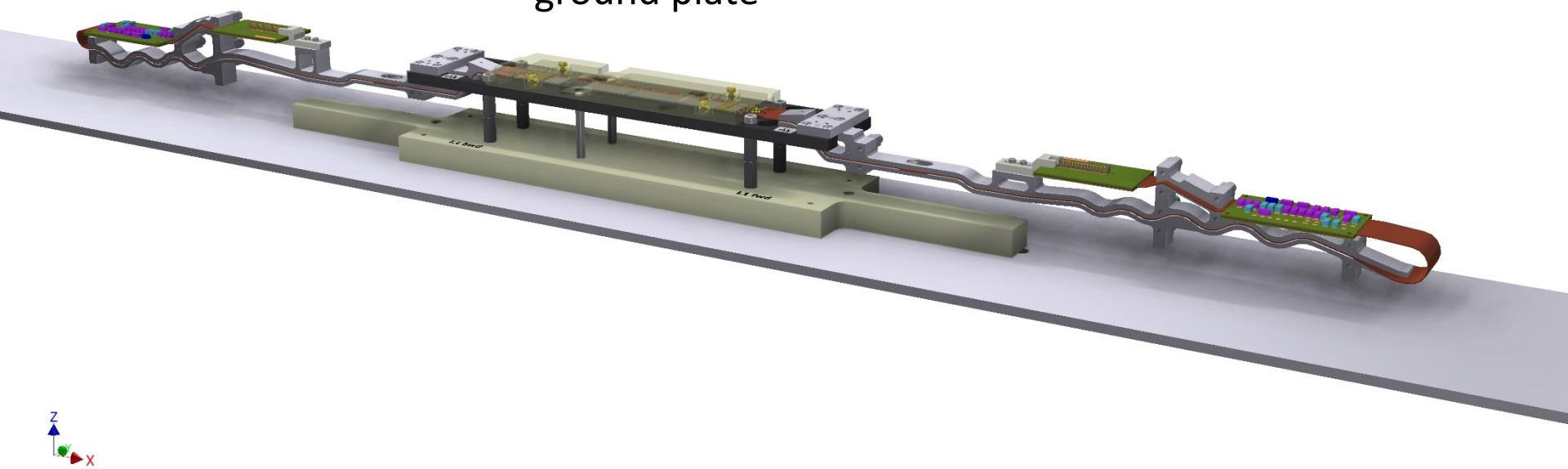

# Phase 2 Ladder Mounting Sequence L1

Ladder liberated from its protections boxes

Kapton jigs removed

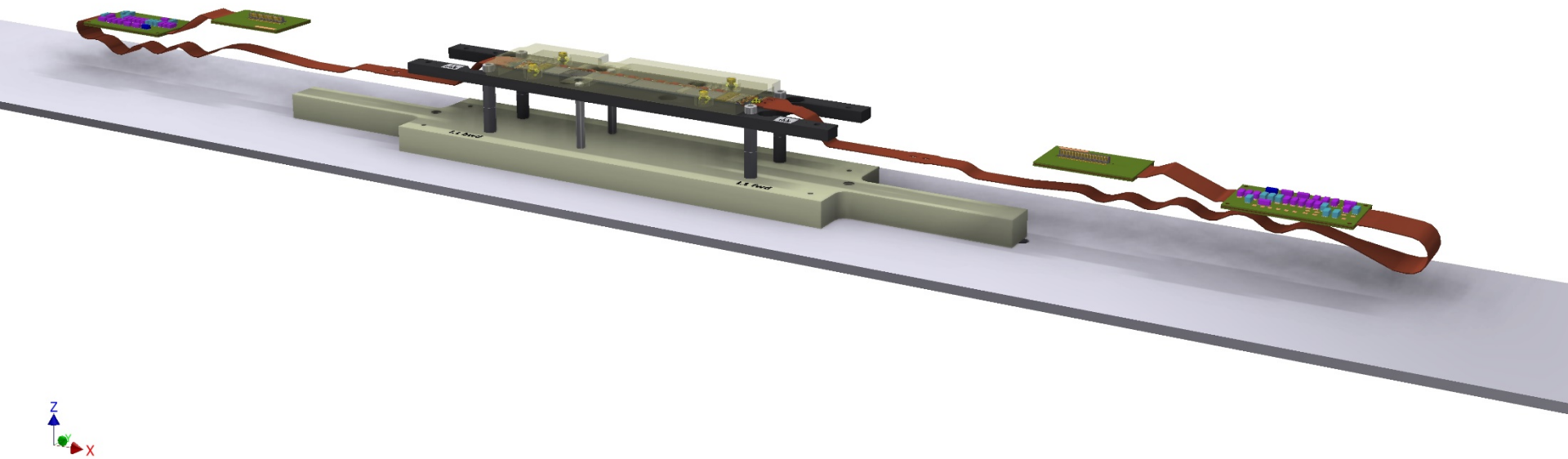

# Phase 2 Ladder Mounting Sequence L1

Push in Kapton support structure (3D printed)

New: rubber fixtures (instead of vacuum)

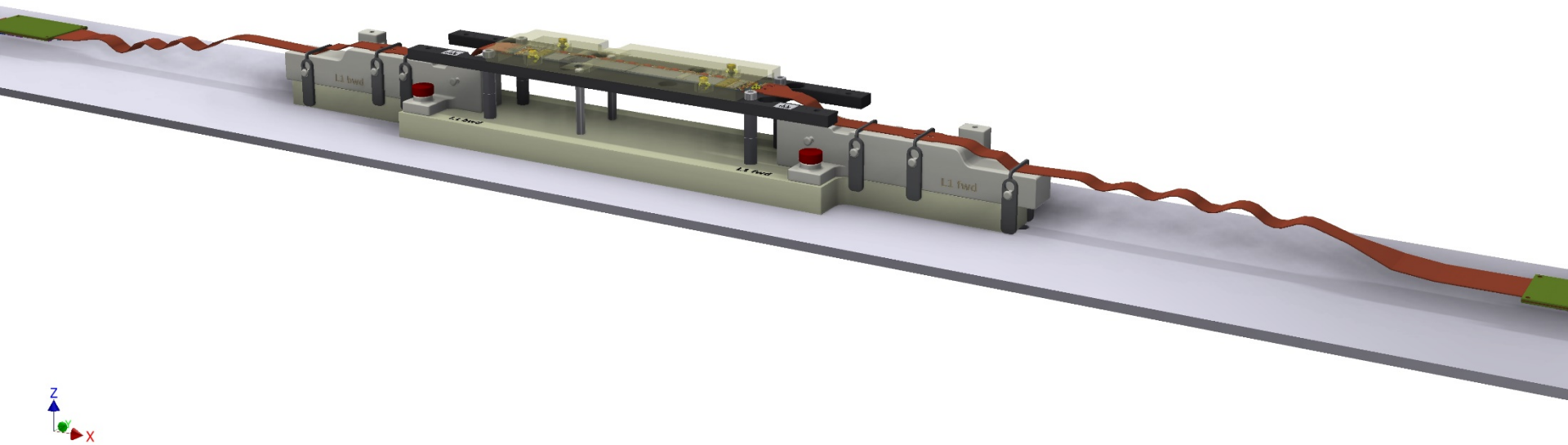

# Ladder Mounting Tools

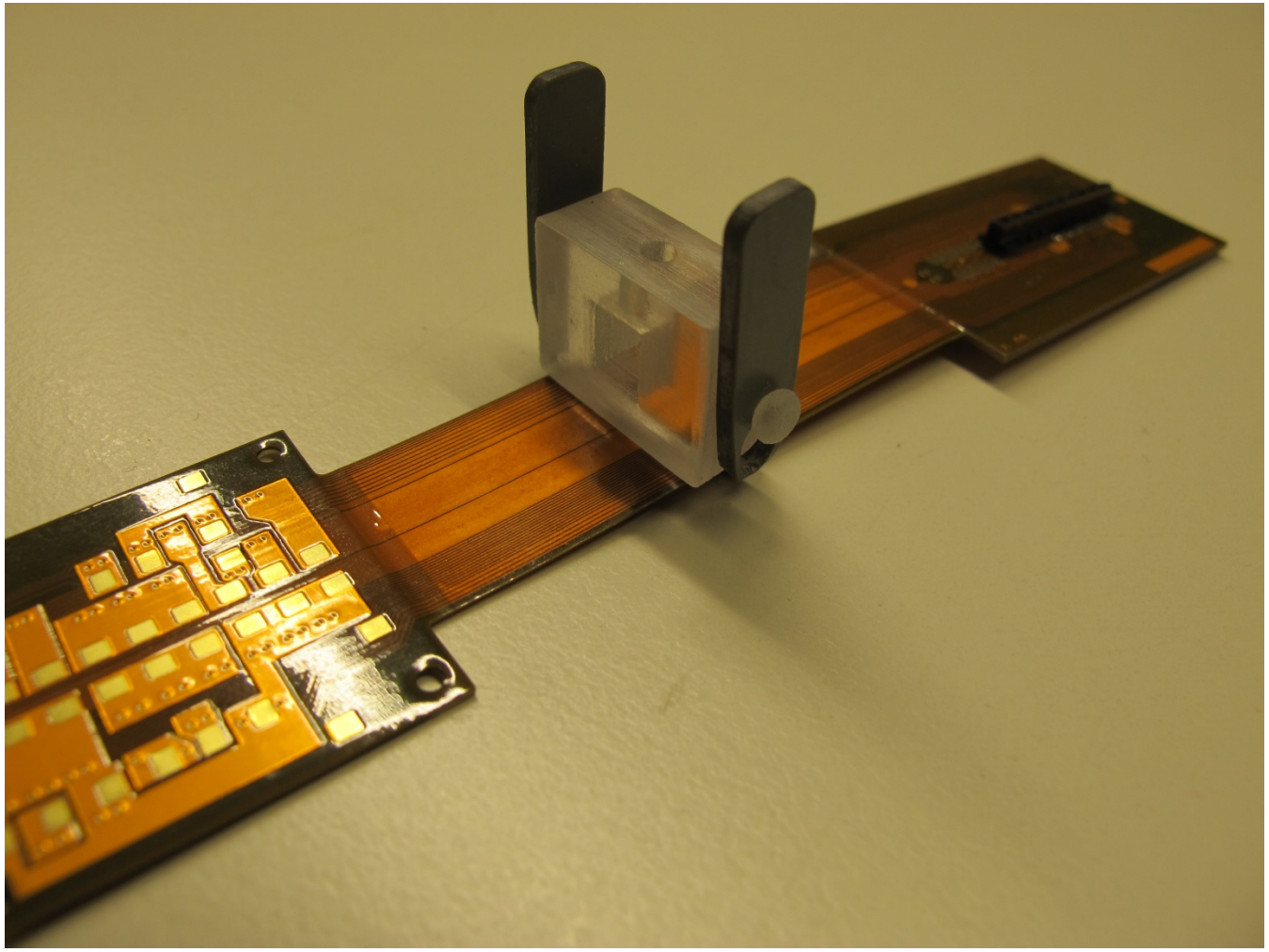

# Phase 2 Ladder Mounting Sequence L1

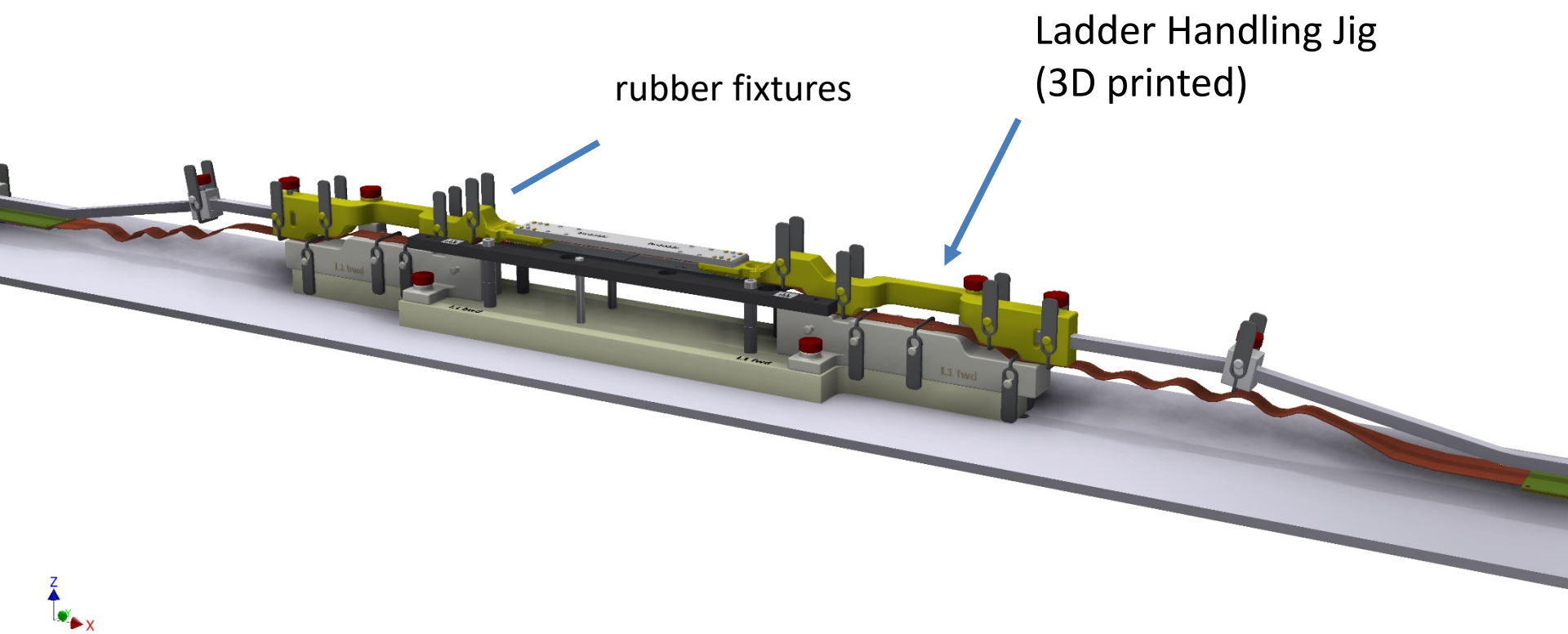

# Phase 2 Ladder Mounting Sequence L1

Remove rubber fixtures from Kapton jig

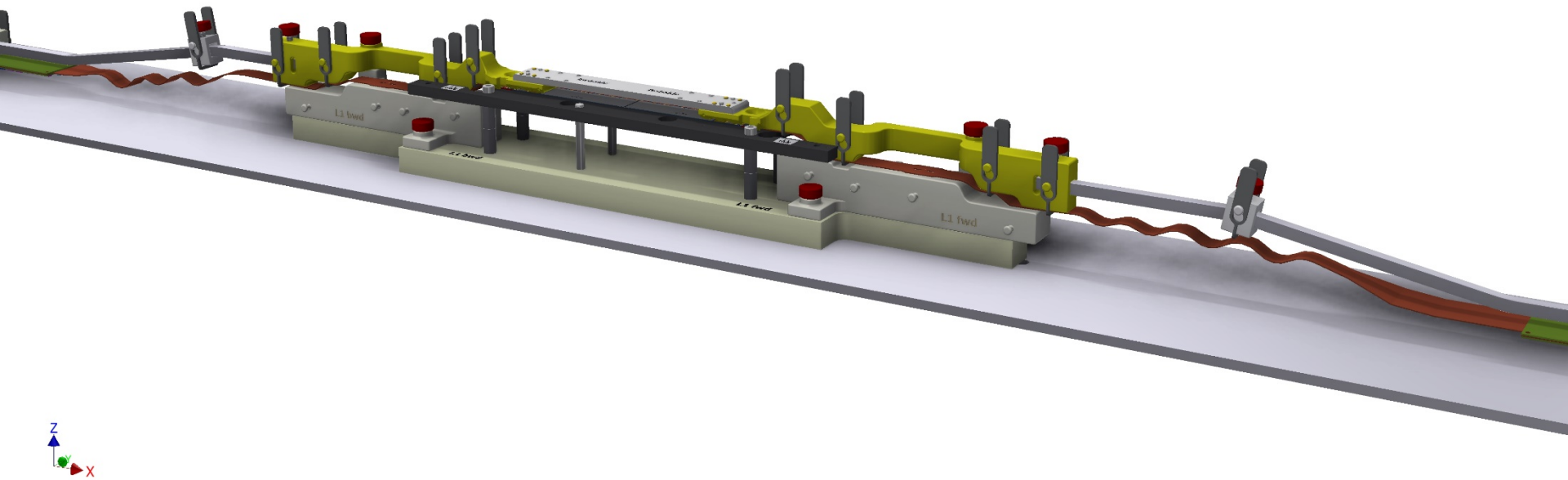

# Phase 2 Ladder Mounting Sequence L1

"lift off" by hand

# Phase 2 Ladder Mounting Sequence L1

Set sensor down on SCB by hand

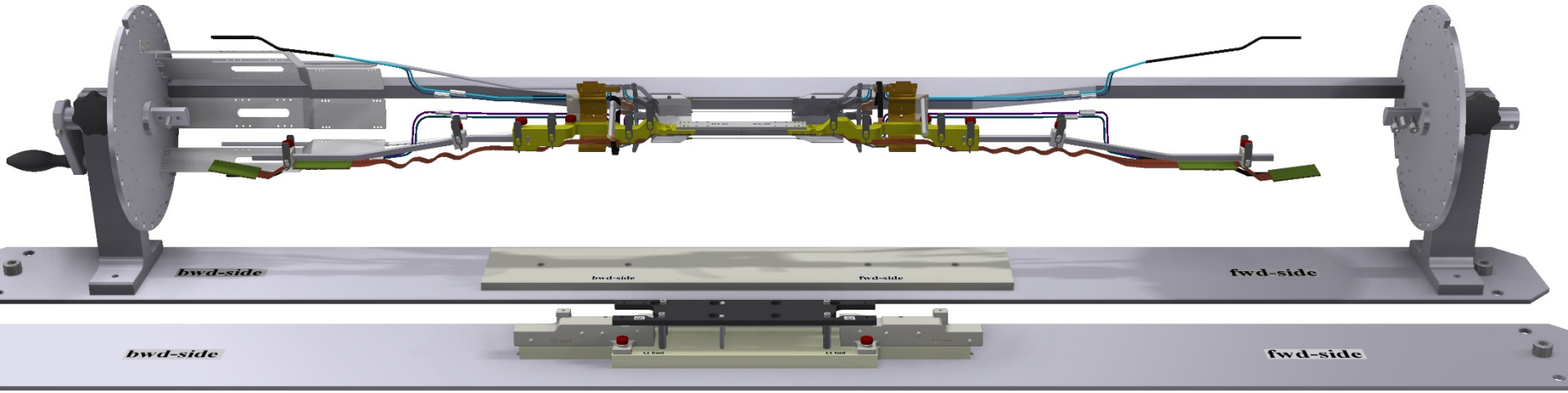


Rotatable stage with SCB half-shell fixed on SCB supports

# Phase 2 Ladder Mounting Sequence L1

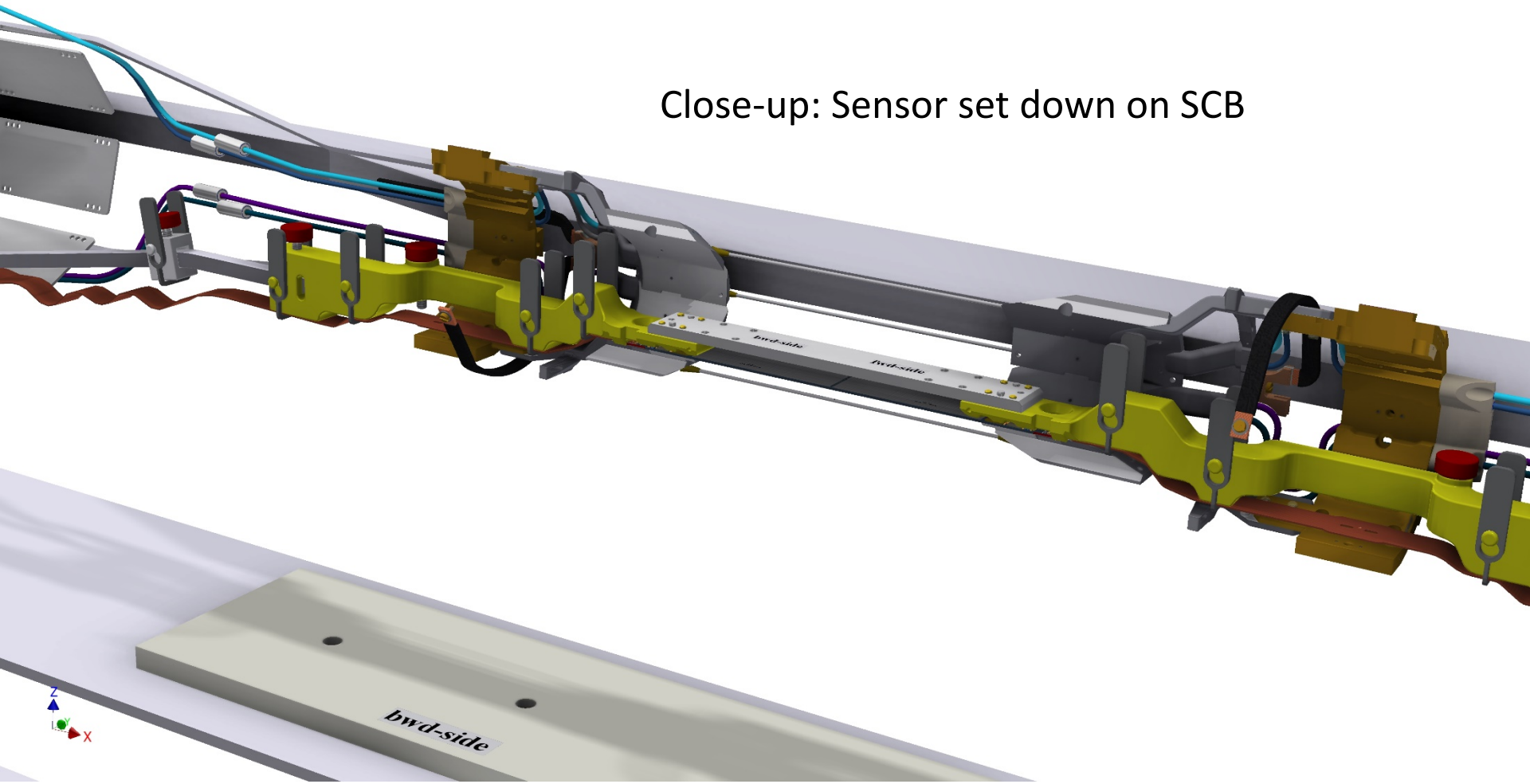

# Phase 2 Ladder Mounting Sequence L1

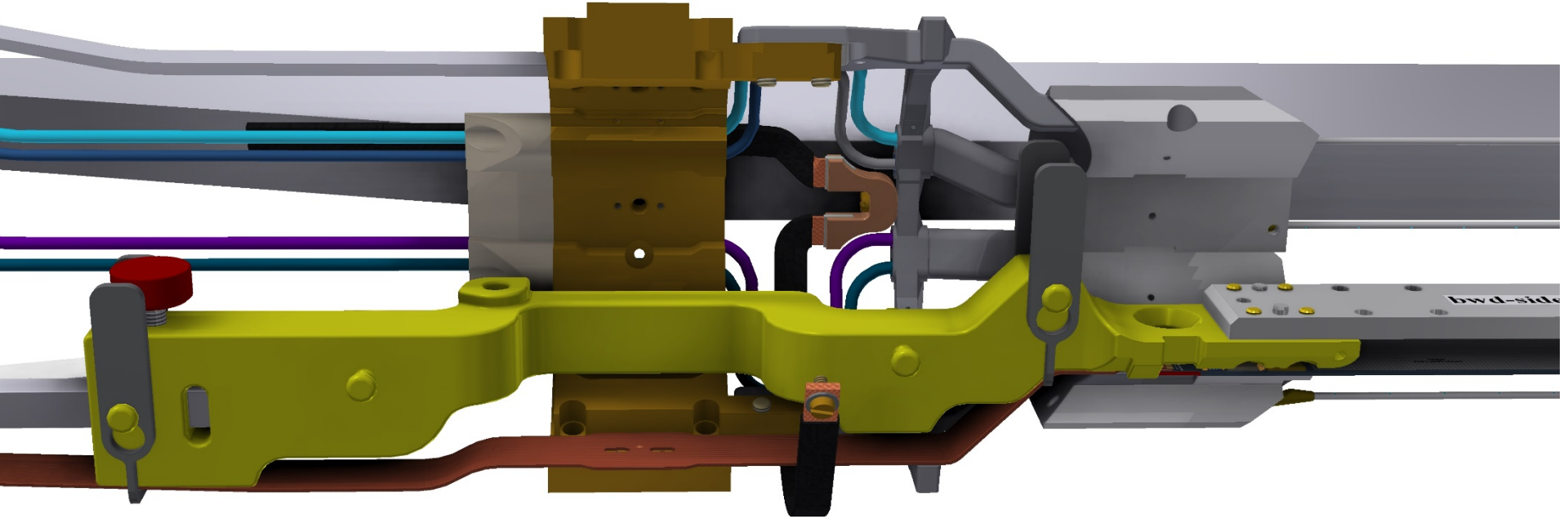


Fix Kapton and sensor by screws

# Phase 2 Ladder Mounting Sequence L1

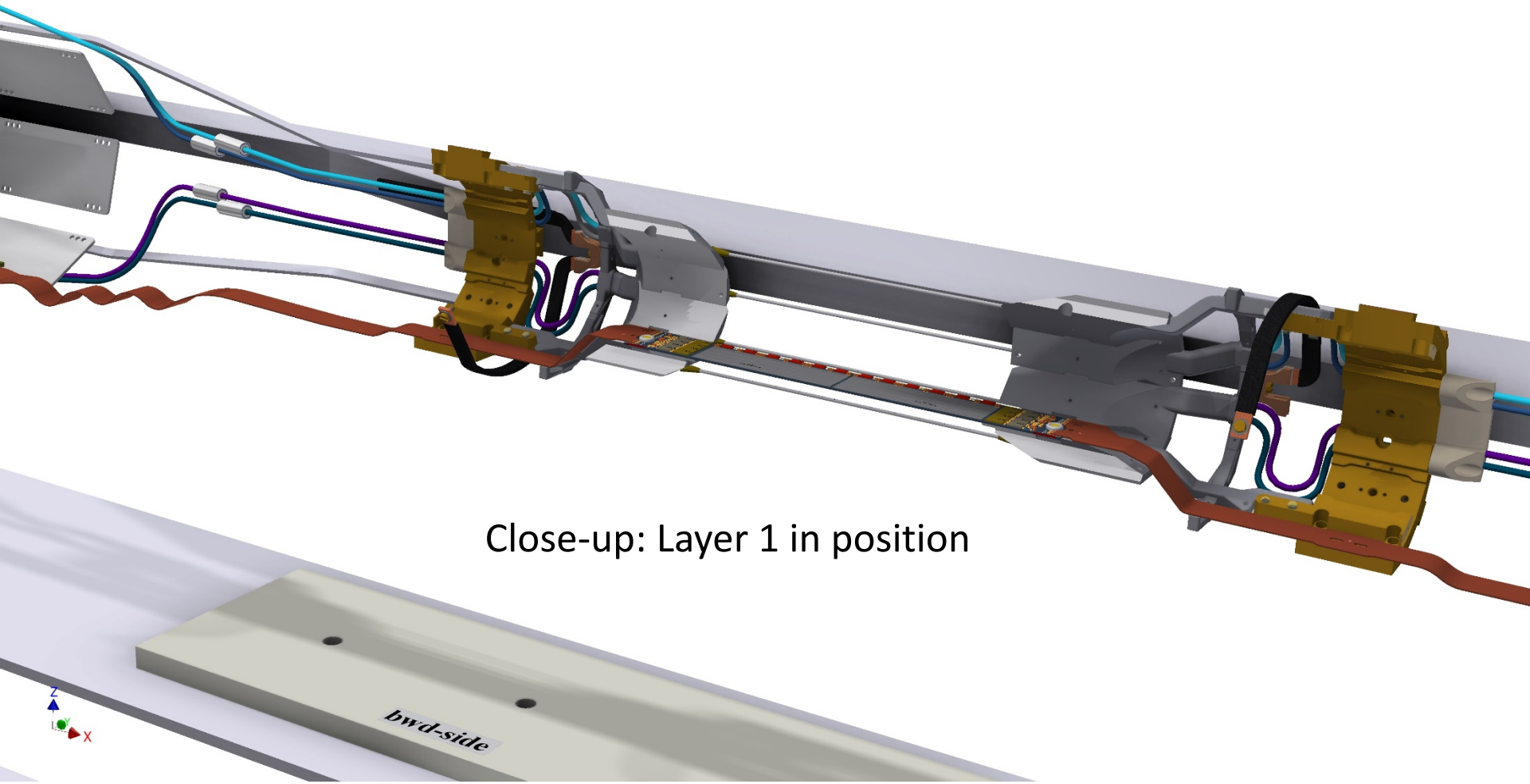


Close-up: Layer 1 in position

# Phase 2 Ladder Mounting Sequence L2

Repeat mounting for layer 2 ladder

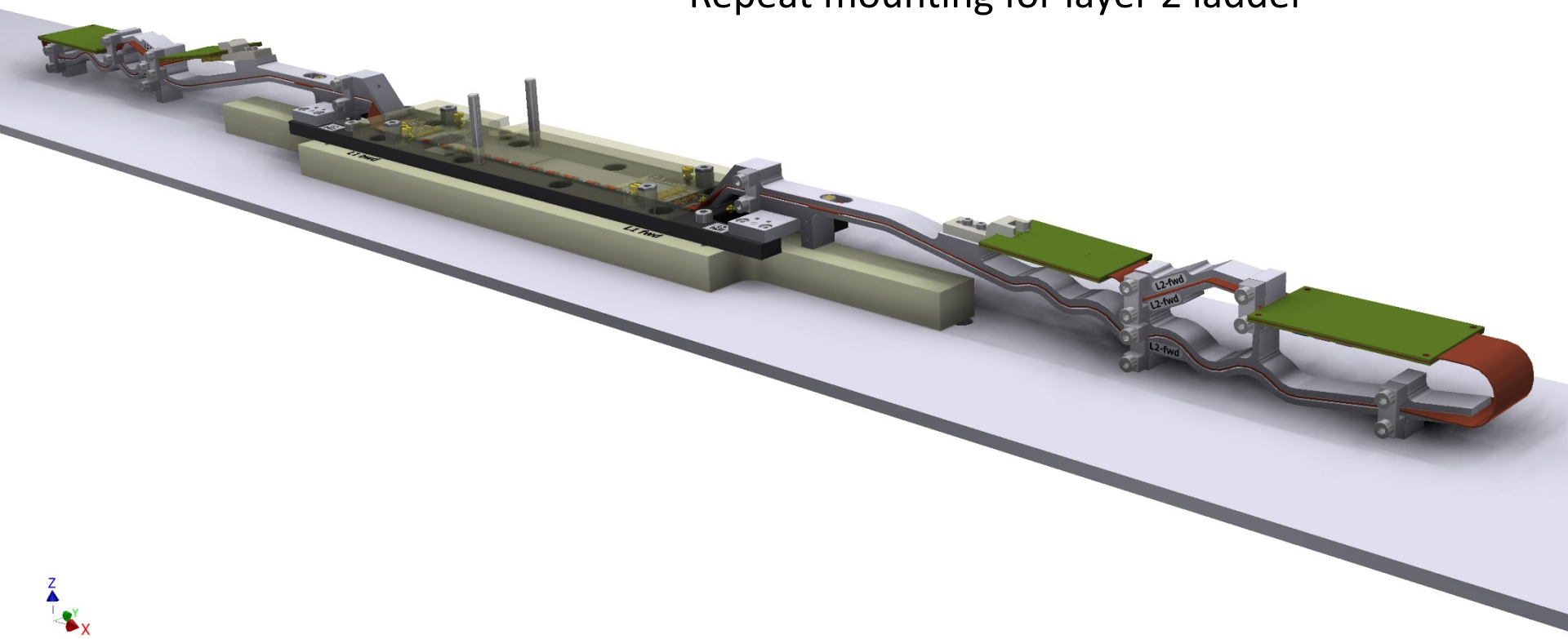

# Phase 2 Ladder Mounting Sequence L2

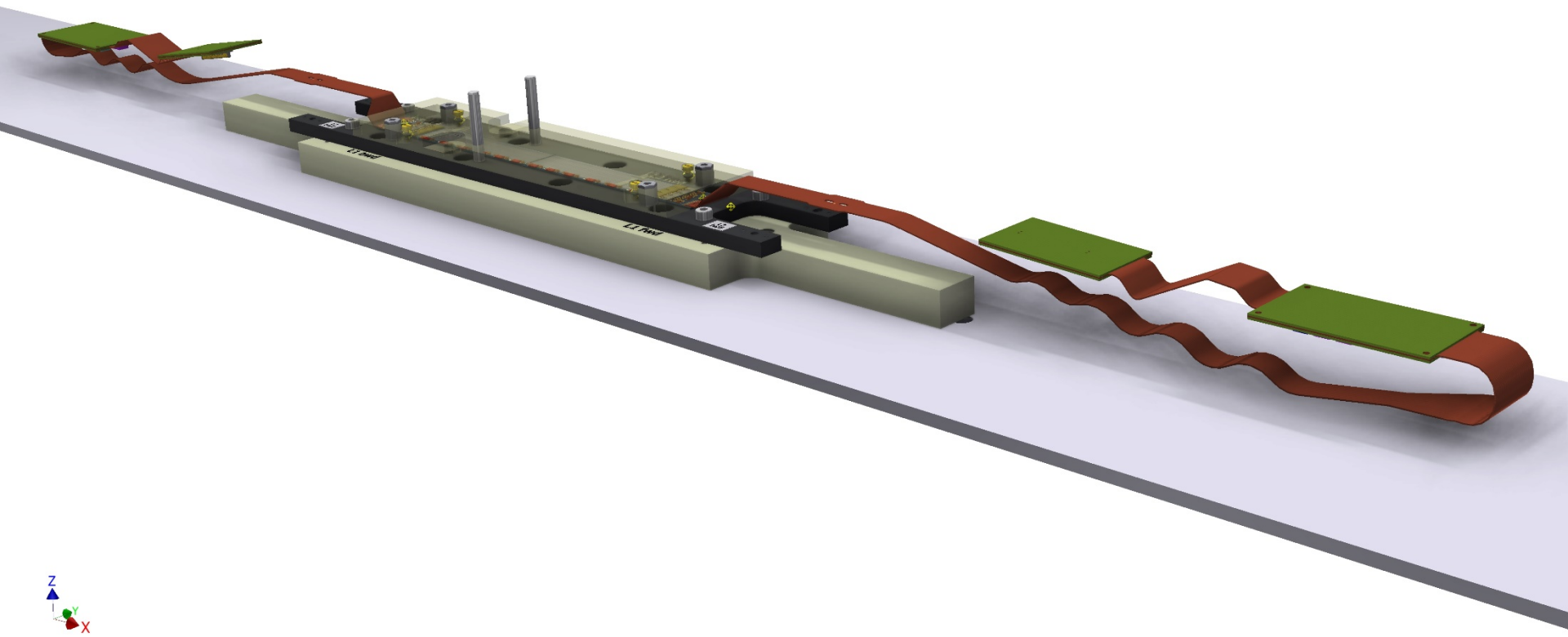

# Phase 2 Ladder Mounting Sequence L2

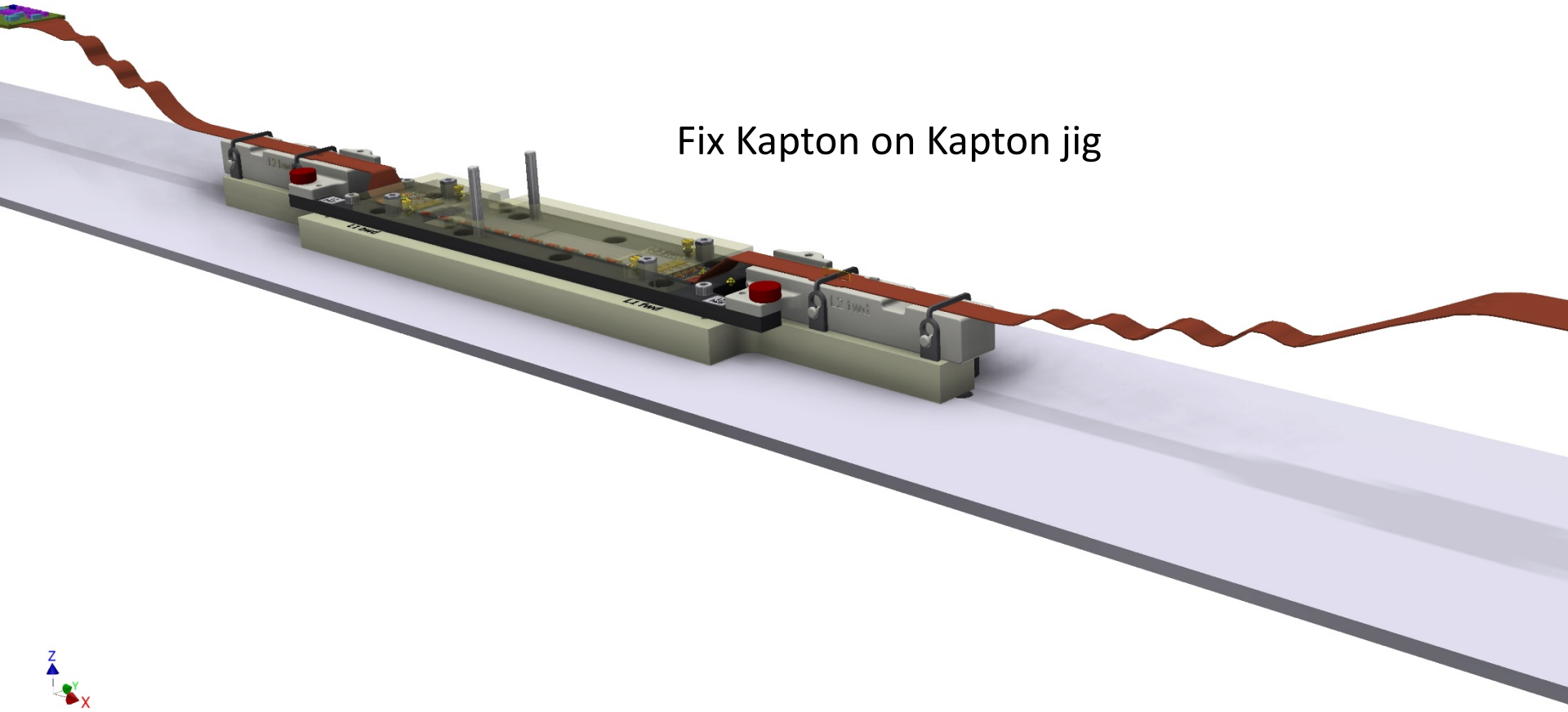

# Phase 2 Ladder Mounting Sequence L2

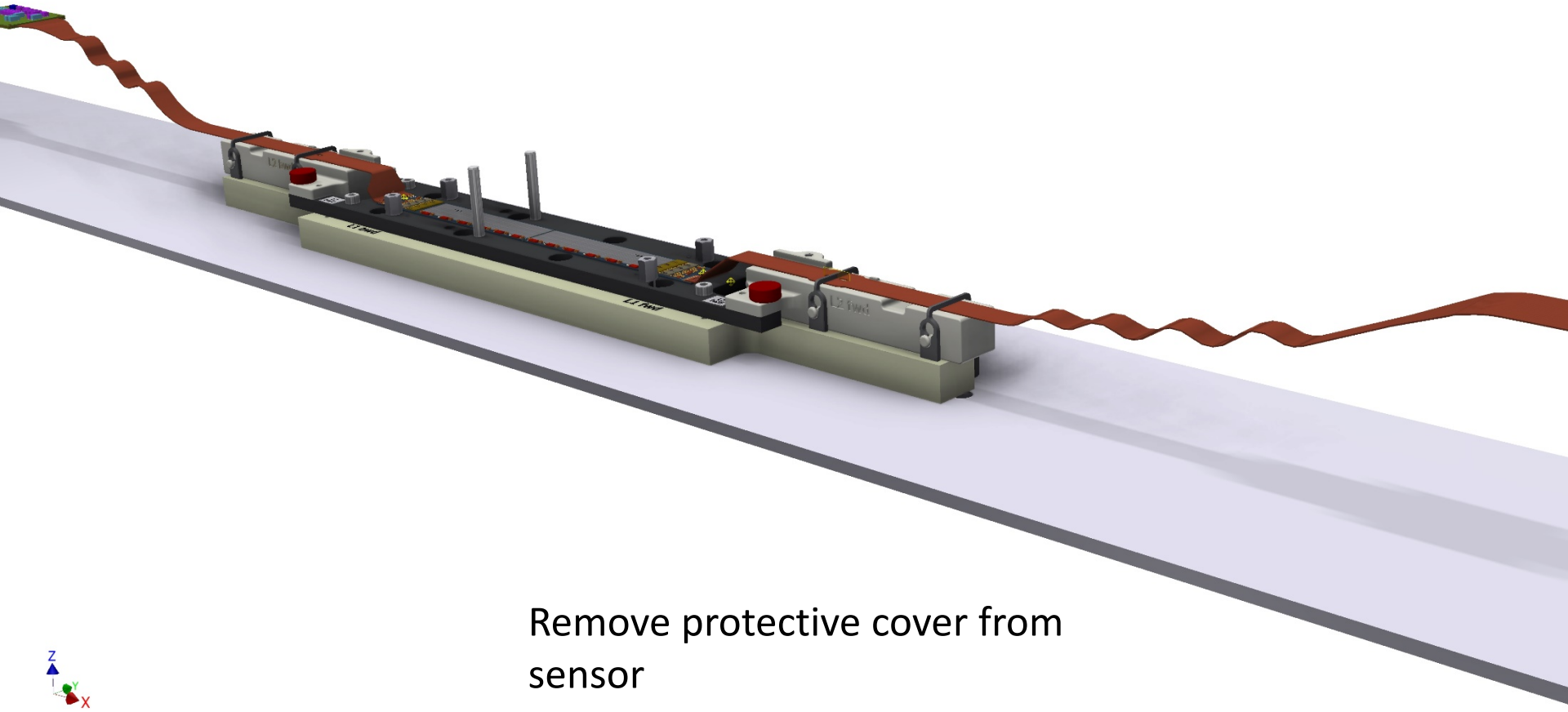

Remove protective cover from sensor

# Phase 2 Ladder Mounting Sequence L2

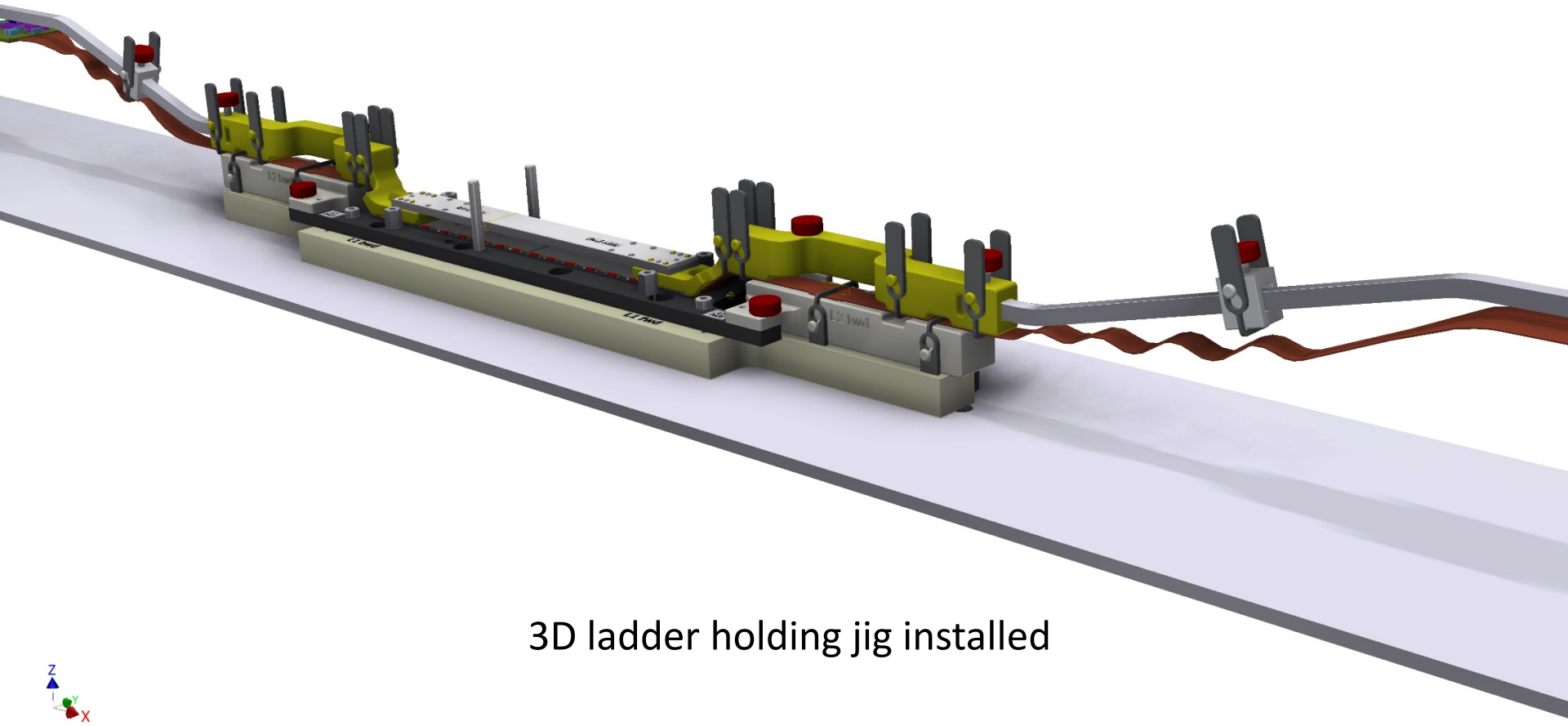

3D ladder holding jig installed

# Phase 2 Ladder Mounting Sequence L2

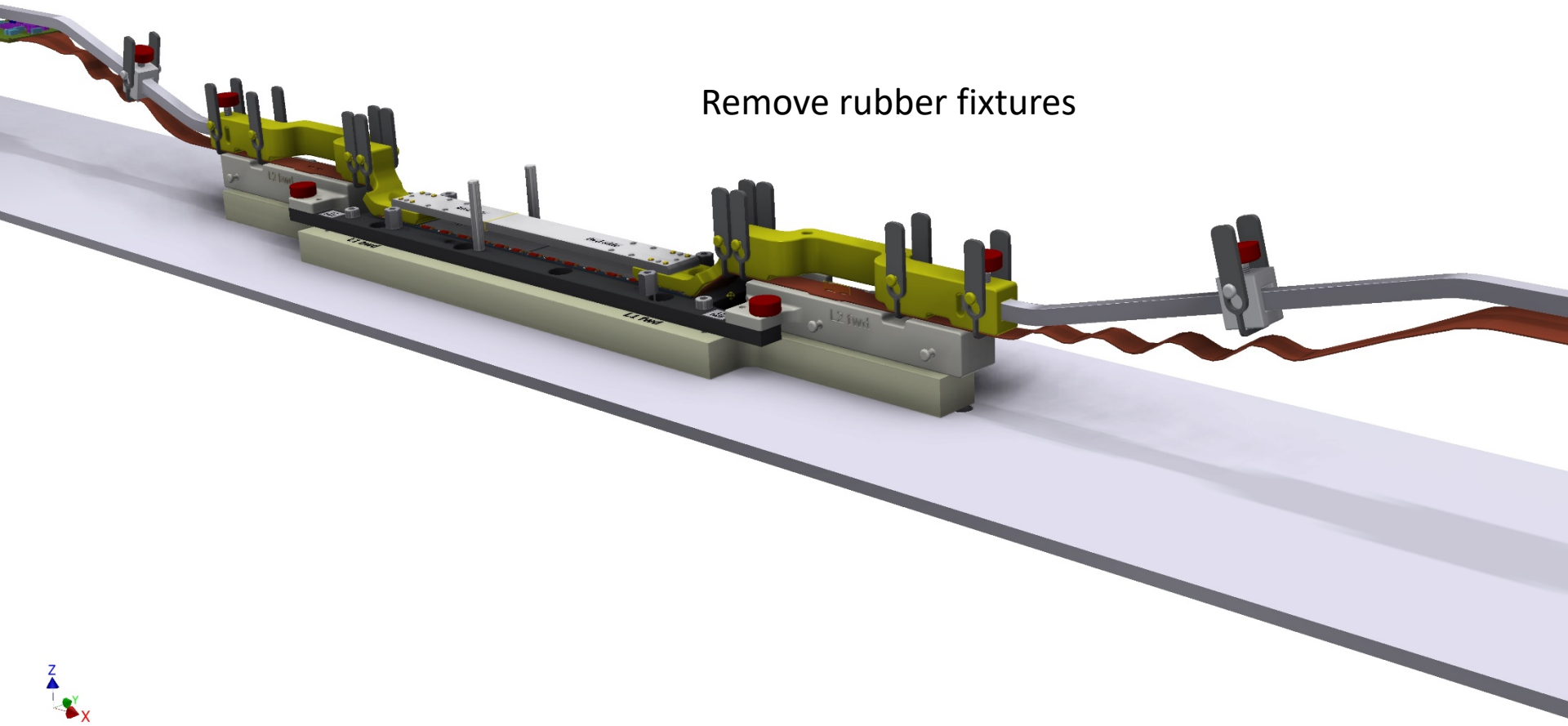

# Phase 2 Ladder Mounting Sequence L2

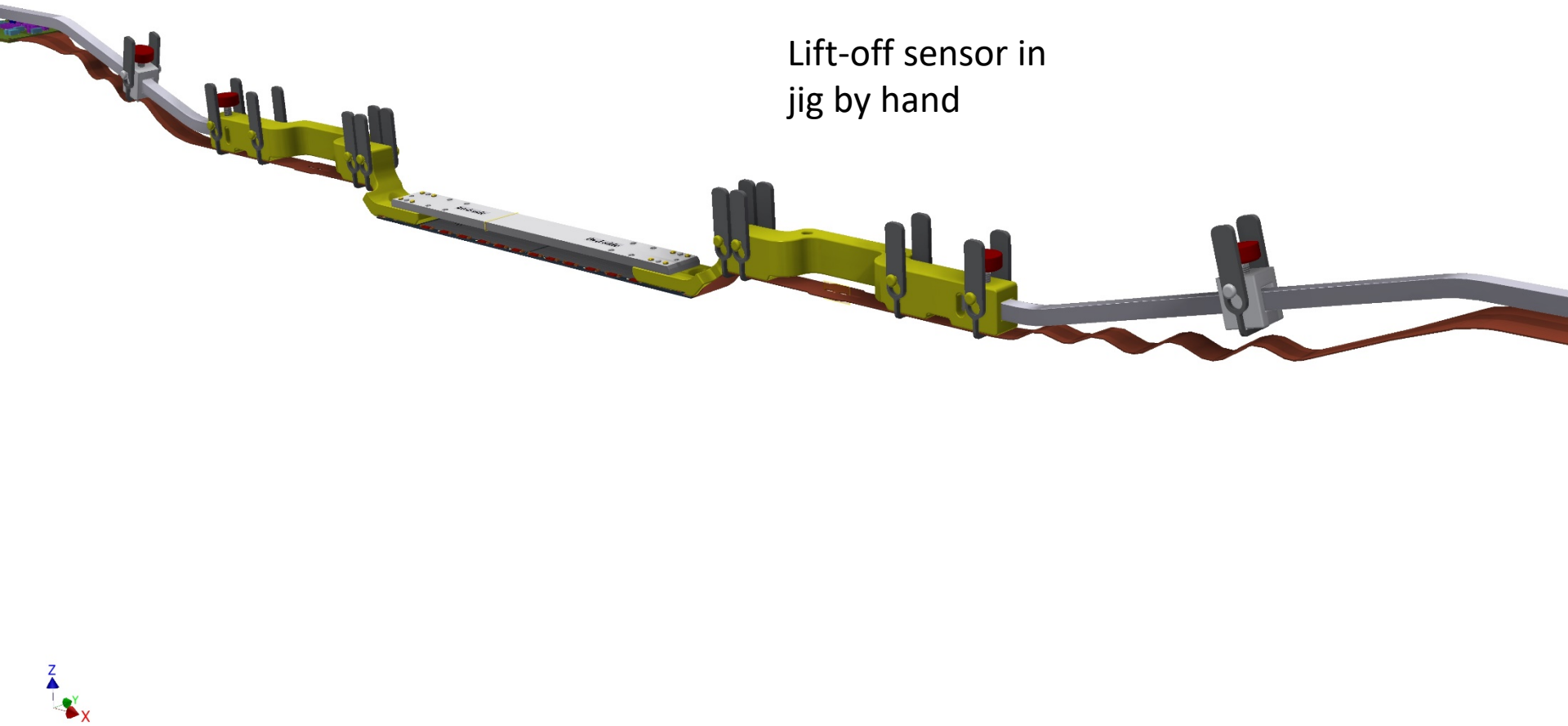

# Phase 2 Ladder Mounting Sequence L2

Set module on SCB (by hand)

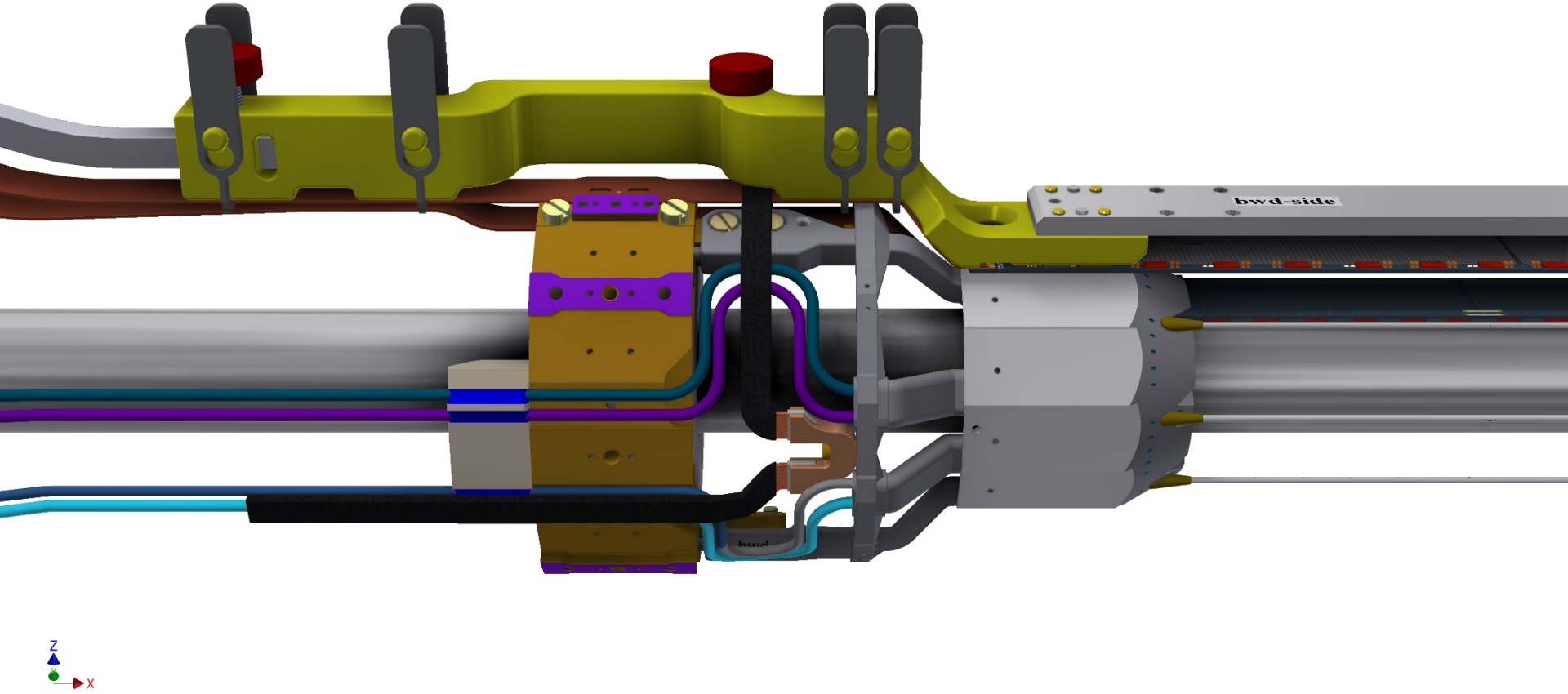

# Phase 2 Ladder Mounting Sequence L2

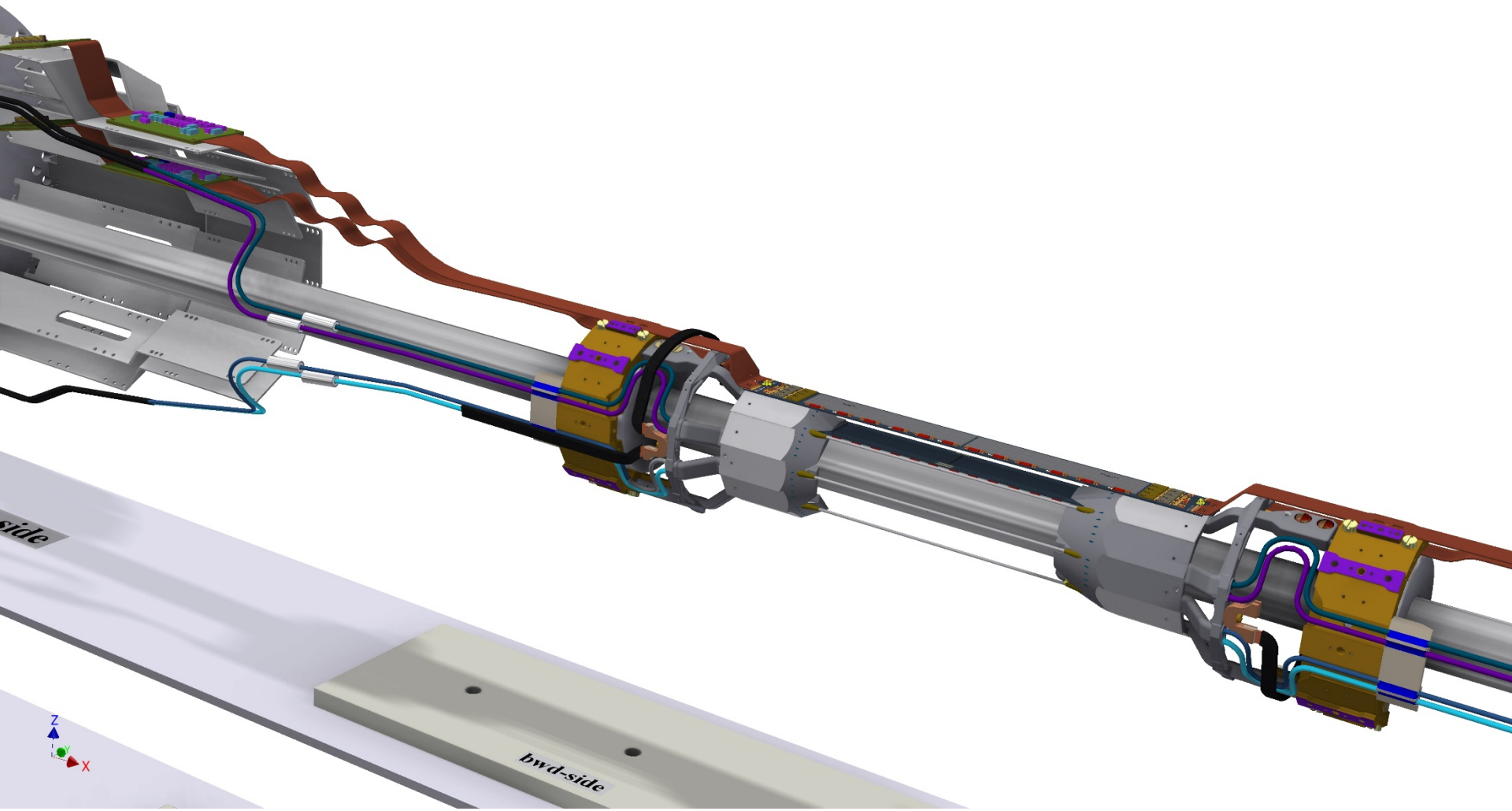

# Phase 2 Ladder Mounting Sequence L2

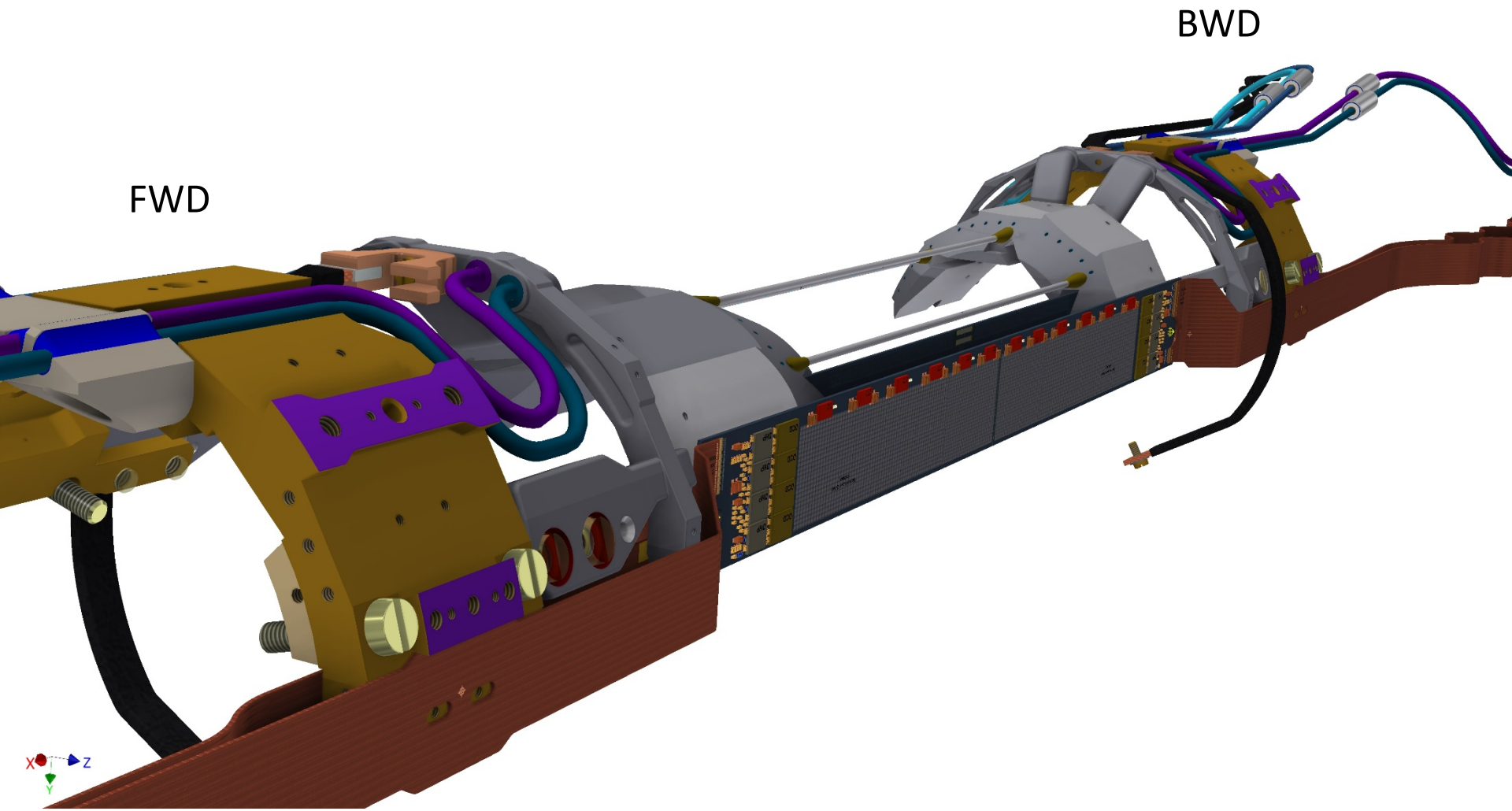

# Half Shell Mounting Tools

Fix handle jig on SCB beampipe supports

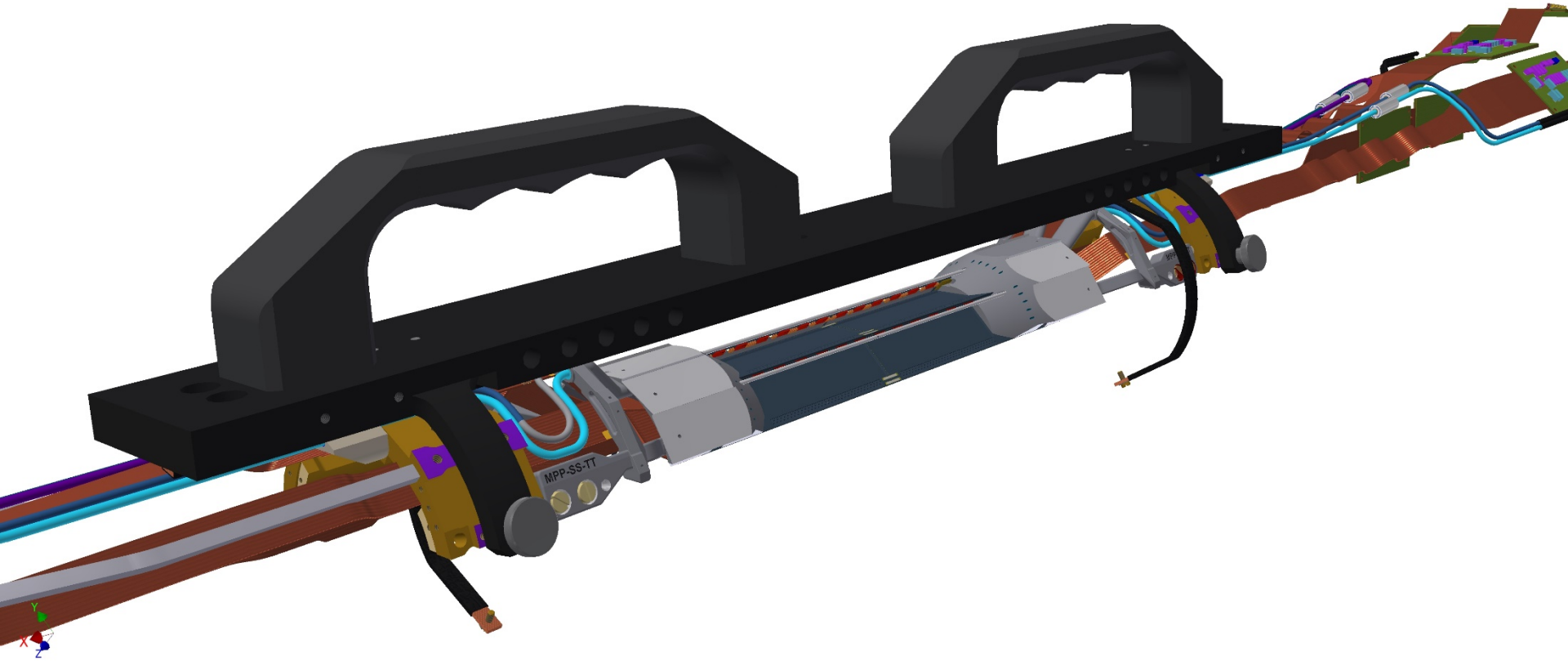

# Half Shell Mounting Tools

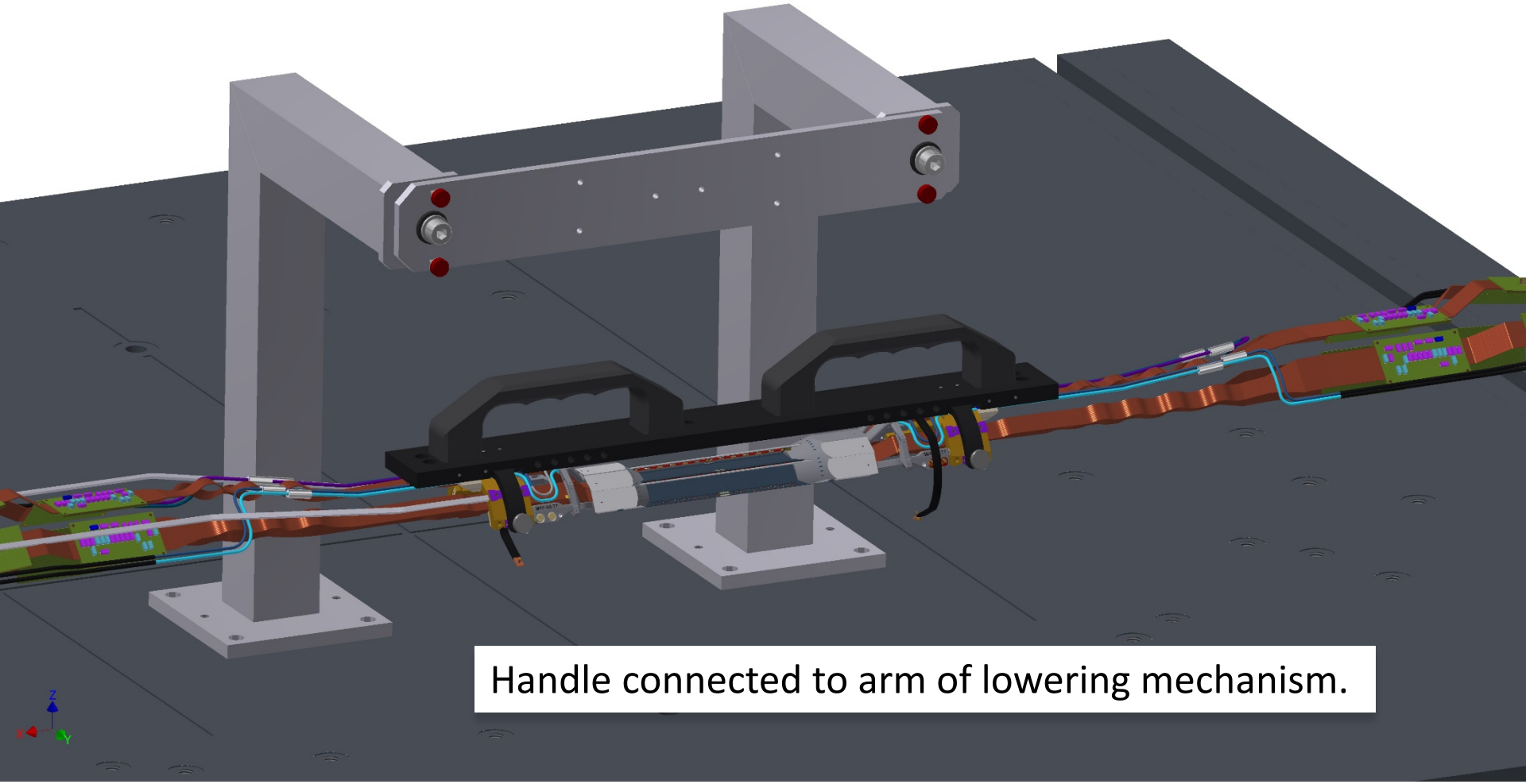

# Service Space around the VXD End Flange

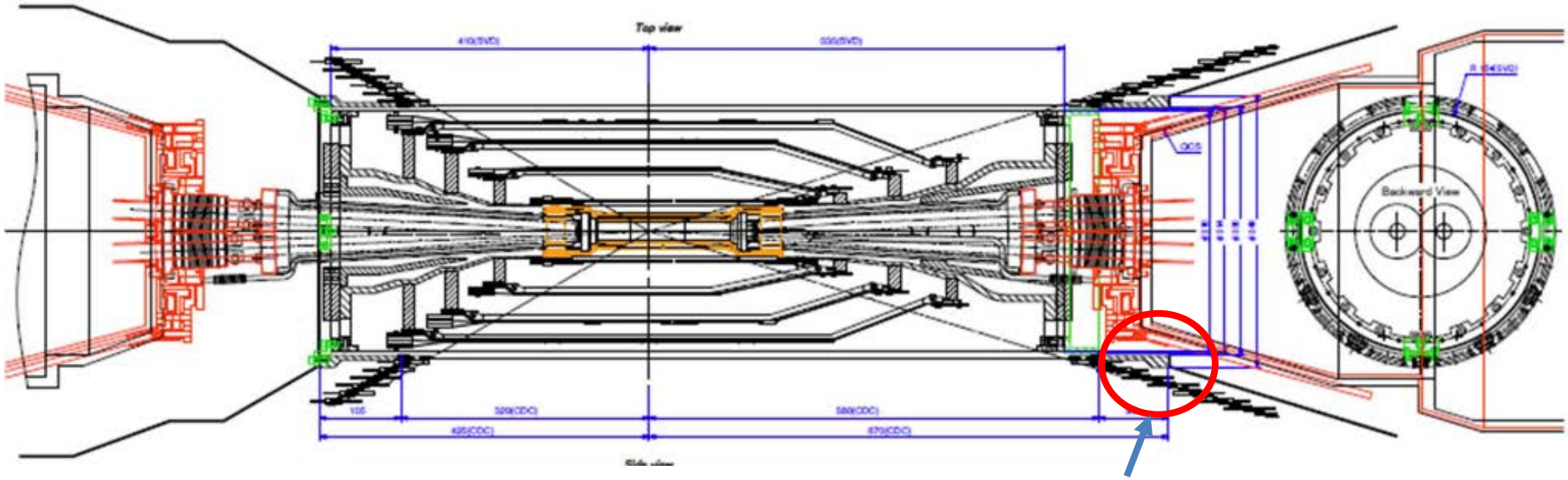


Extremely narrow gap in the FWD regions between inner CDC wall and QCS: only 24 mm clearance -> need a special “patch panel cable cage”

For Phase 3: 270+ cables and pipes on each side AND conserve the “7 mm” rule further out in the gap between cables and QCS outer envelope

Phase 2 is much easier (much less cables), but good exercise for cables fixtures also needed for Phase 3

# Patch Panel Cable Cage

Task:

PXD Cables have to follow a sharp bend upwards, followed by a bendhorizontally (stay within 310 mm diameter)

Patch Panel Cable Cage: 3D print 4 – 6 pieces

Mounting of PPCC first, then lay cable by cable,
fixing each cable by a wire to the cage.

In addition, a metal cylinder could be attached to the PPCC so that the Radius of 310 mm is guaranteed (Inner radius of the CDC = 320 mm)

# Patch Panel Cable Cage

No final design, just to demonstrate the principle

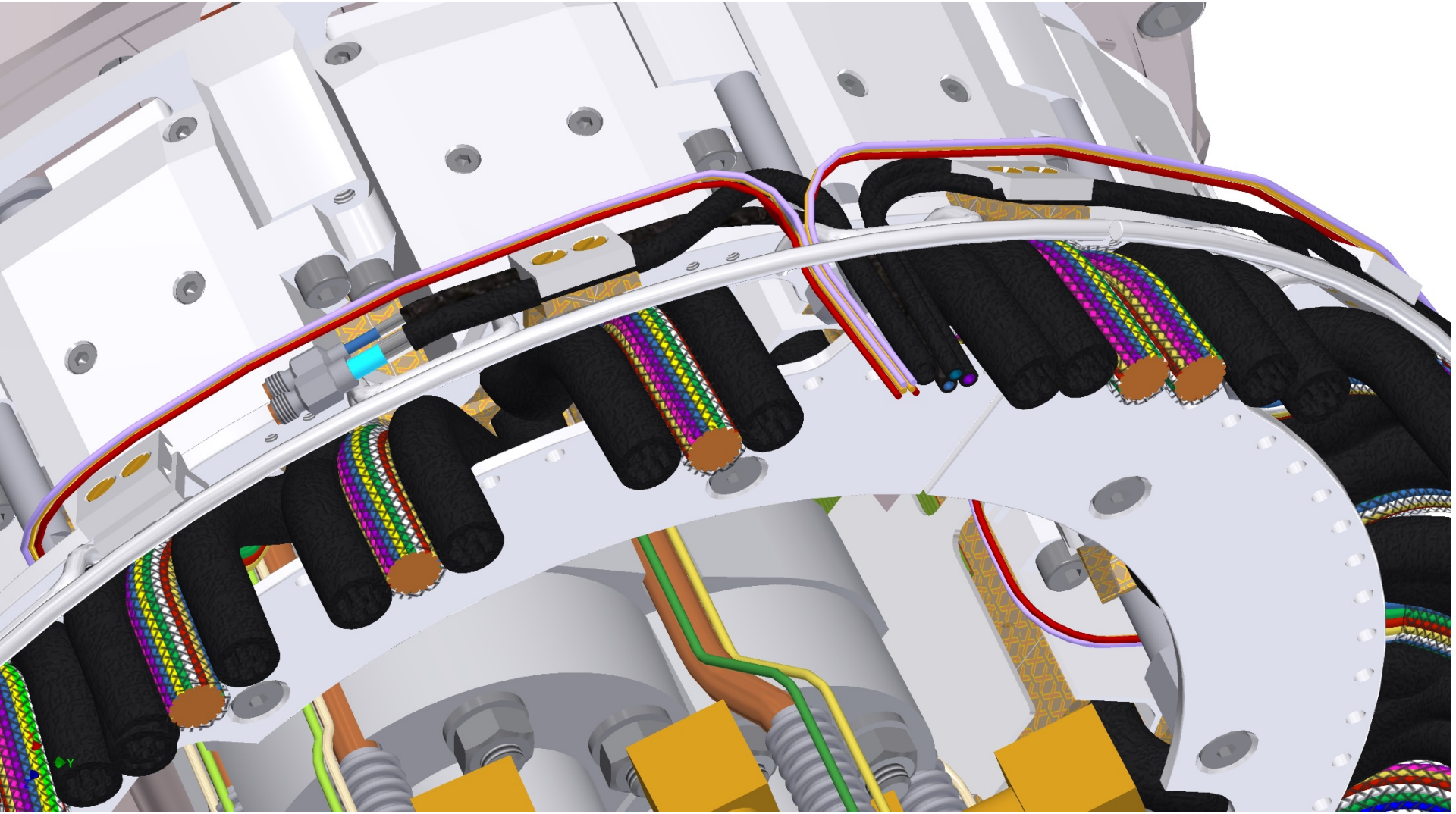

# Mechanical Tools: Cable Routing inside CDC


BWD CDC cable cage

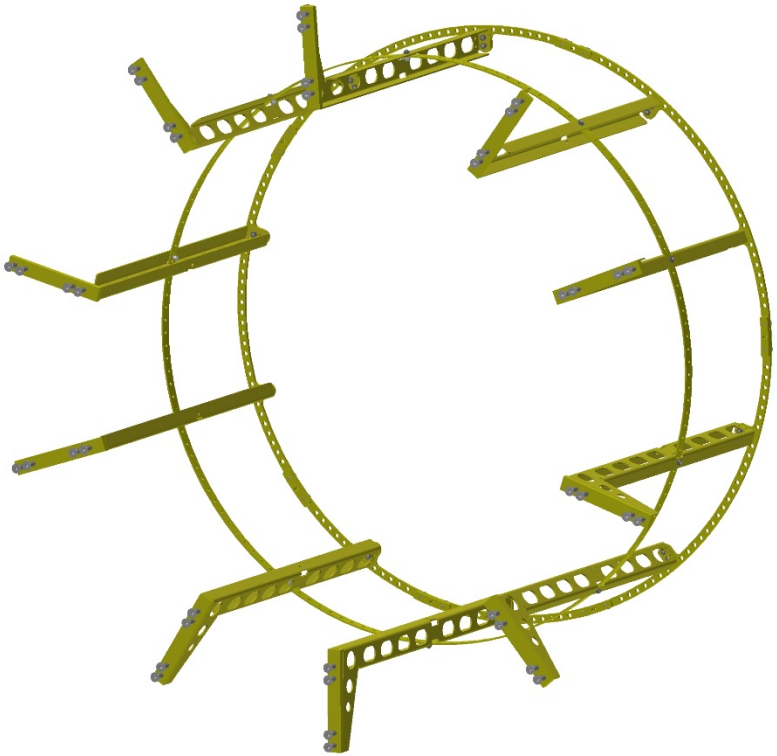

# Mechanical Tools: Cable Routing inside CDC

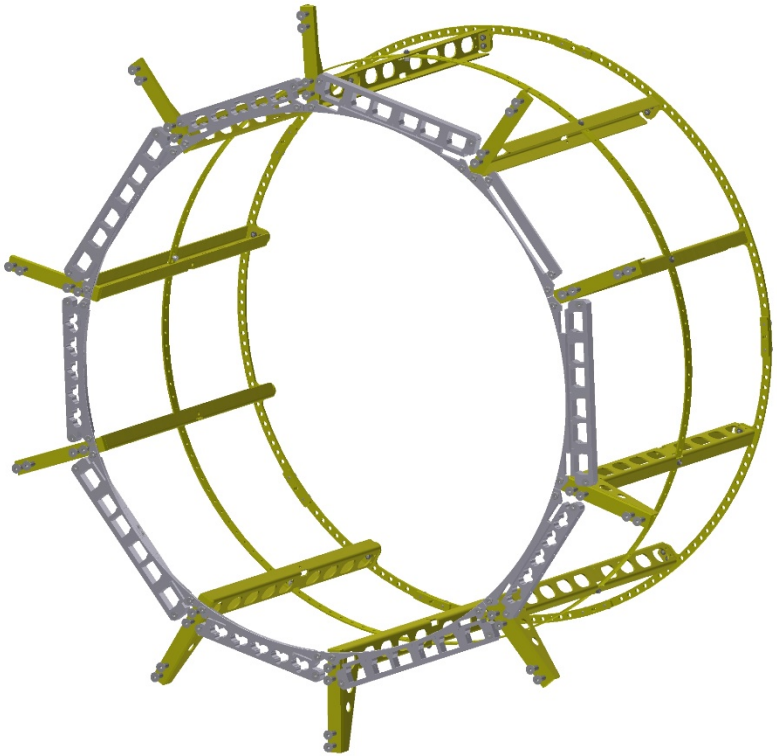

Cable comb
(arrange cables on perimeter)

# Mechanical Tools: Cable Routing inside CDC

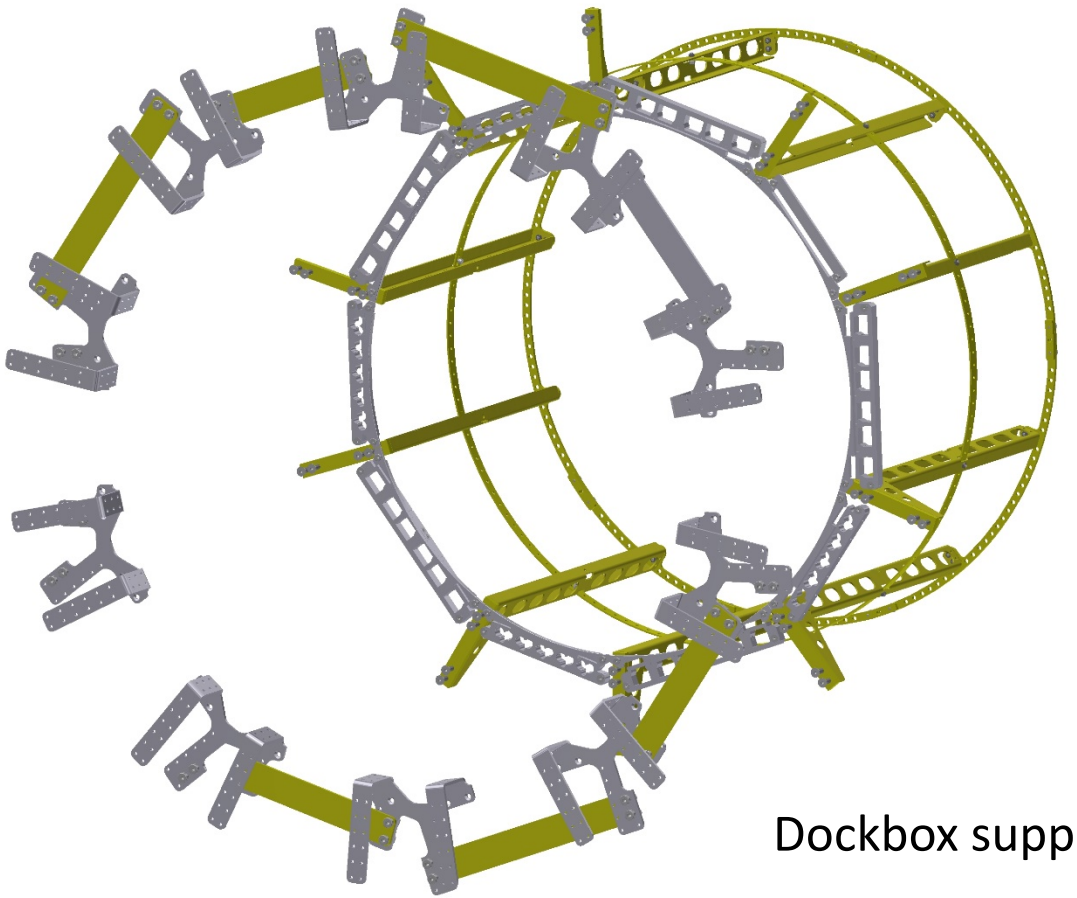

Dockbox support ring

# Mechanical Tools: Cable Routing inside CDC

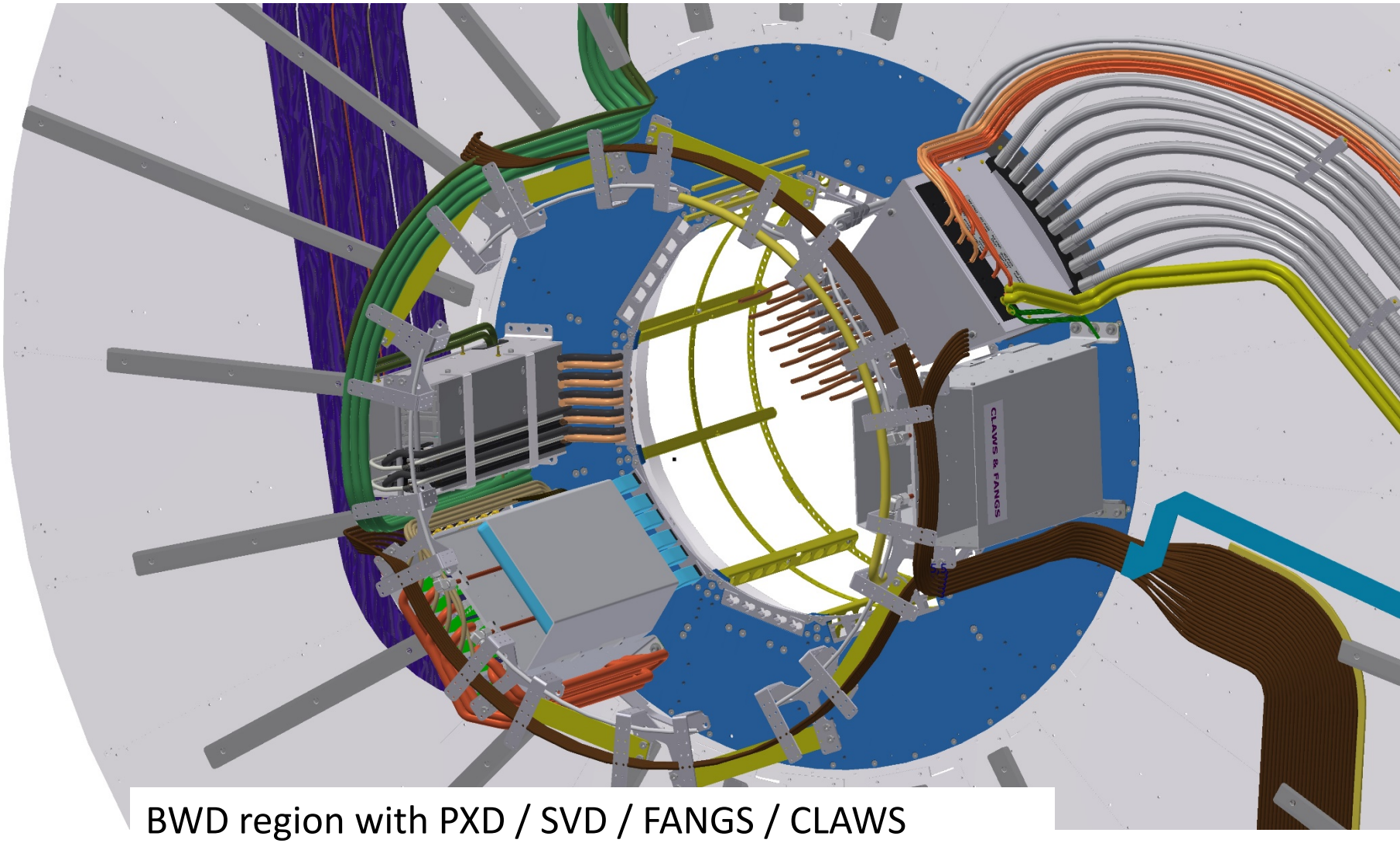


BWD region with PXD / SVD / FANGS / CLAWS
(TPC / He boxes not shown)

# Phase 2: BWD Side Dockbox Arrangement

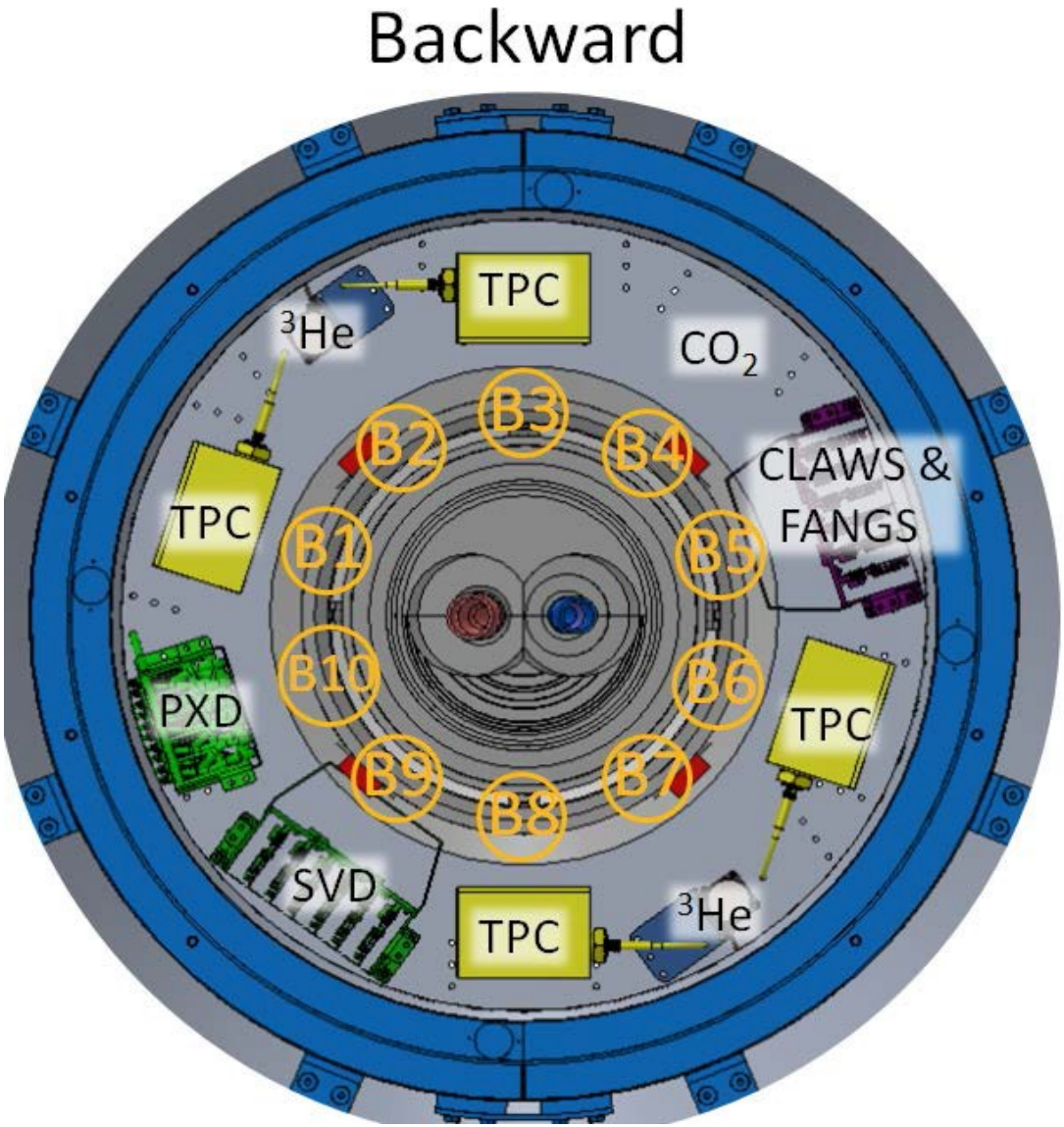

# Mechanical Tools: Cable Routing inside CDC

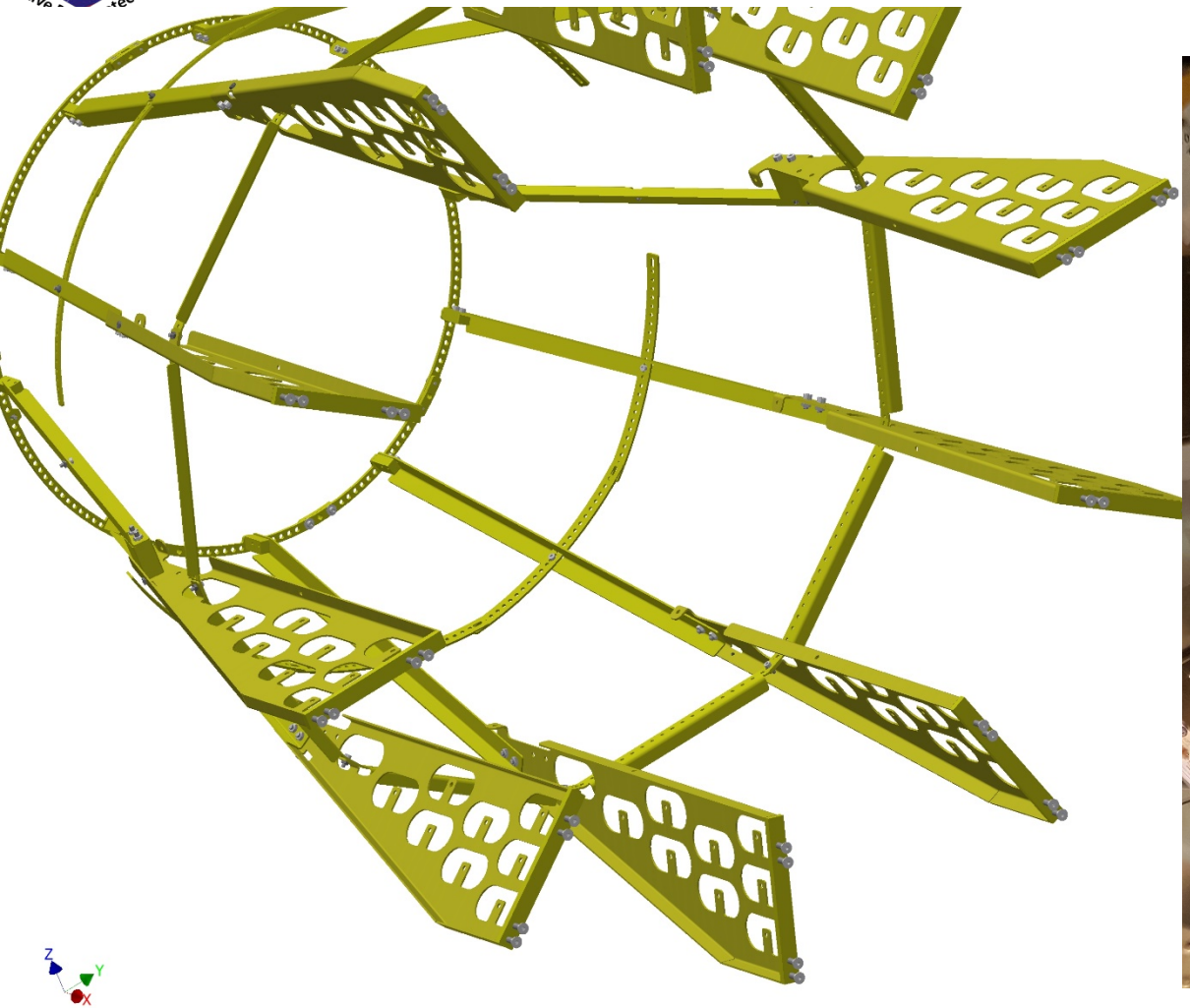

CDC cable cage FWD region

# Mechanical Tools: Cable Routing inside CDC

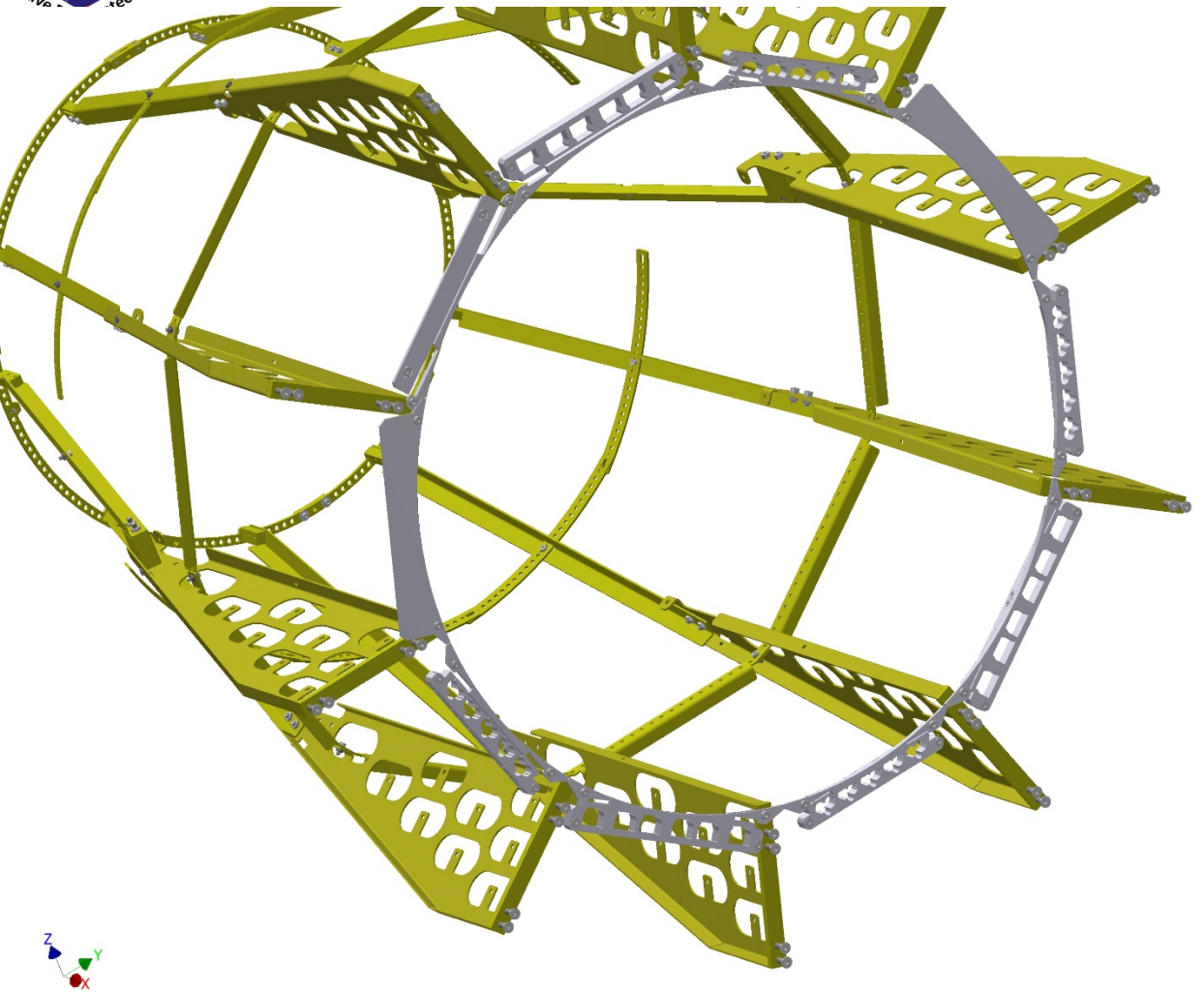

Cable comb
(arrange cables on perimeter)

# Mechanical Tools: Cable Routing inside CDC

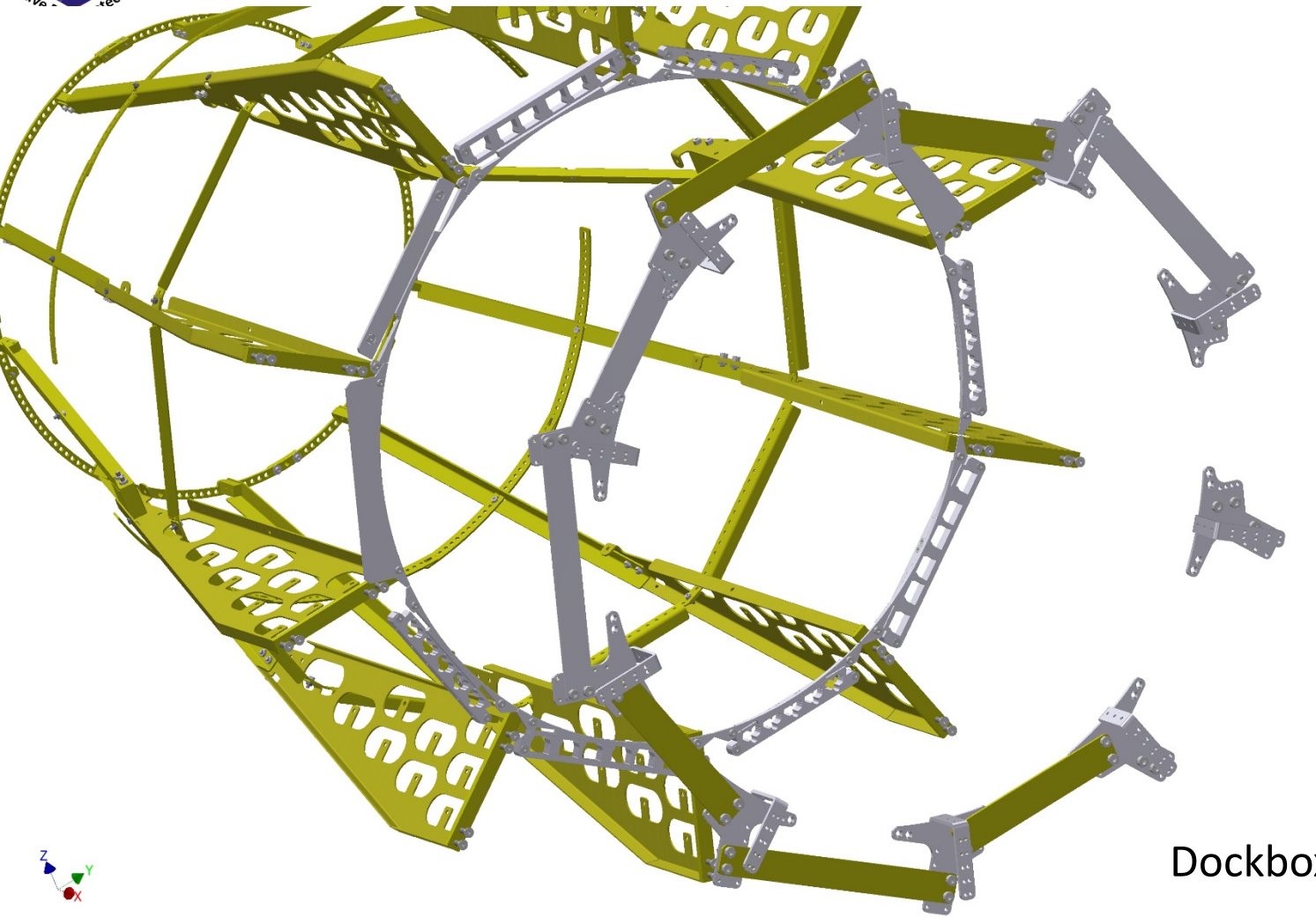

Dockbox support ring

# Mechanical Tools: Cable Routing inside CDC

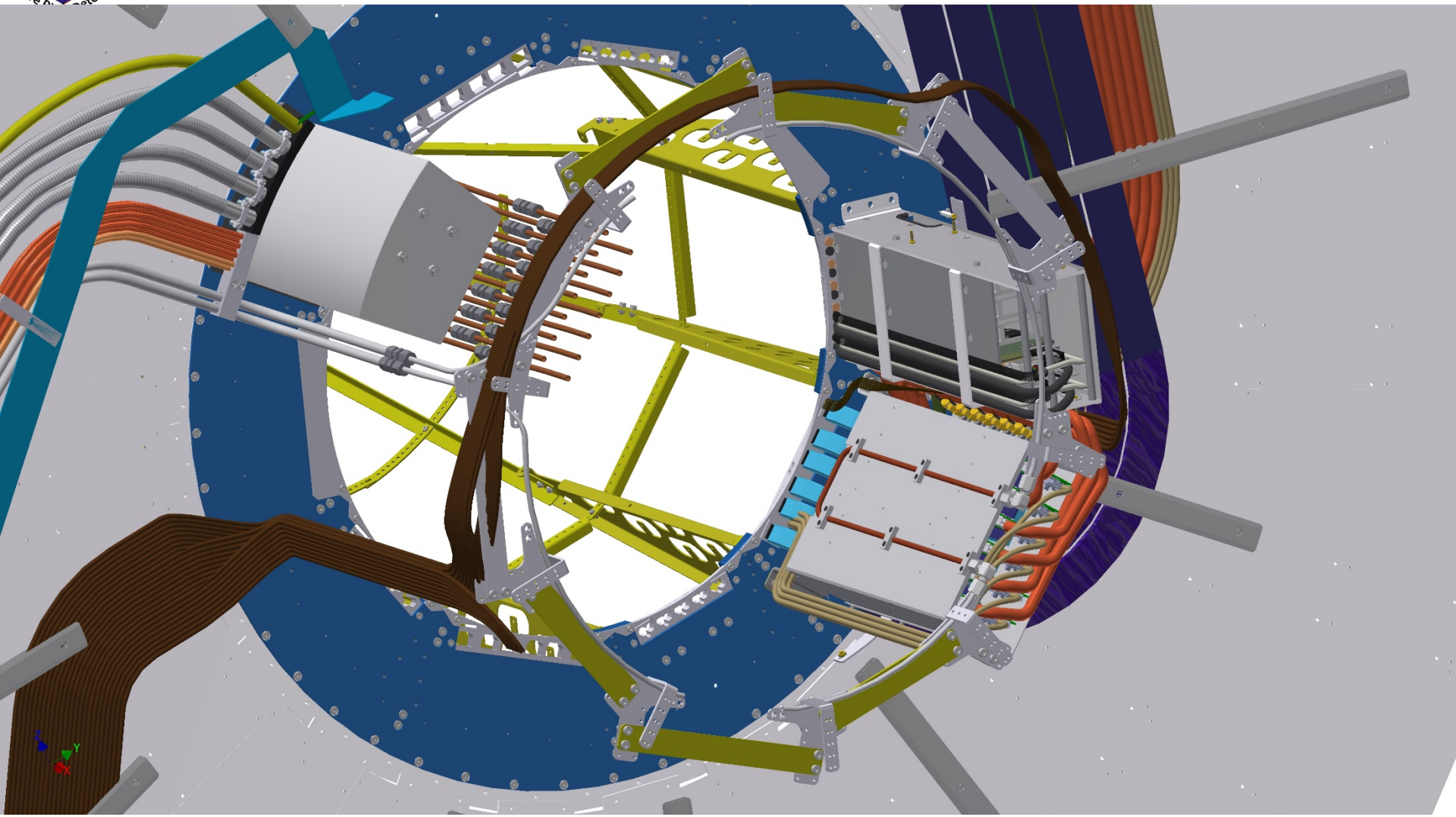

FWD region with PXD / SVD (Plume / TPC / He boxes not shown)

# Mechanical Tools: Cable Routing inside CDC

FWD CDC cable cage installed
(inner spokes removed for
B-Field Mapper installation)

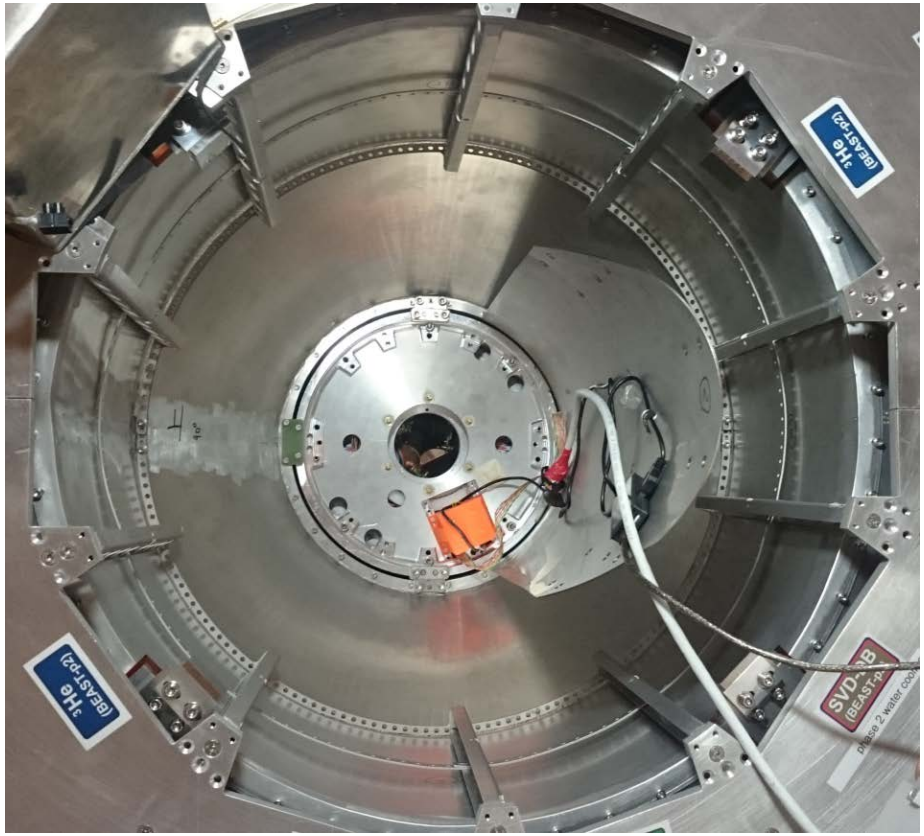


BWD CDC cable cage installed

# Cable Routing on CDC BWD Side

Preview. Phase 3

1 : PXD Power
2 : SVD LV
3 : diamond signals
4 : NTC services

Important:

PXD Power and SVD LV must be guided in ϕ on the DBS ring
(no space for crossing on the CDC wall )
(FWD side is easier)

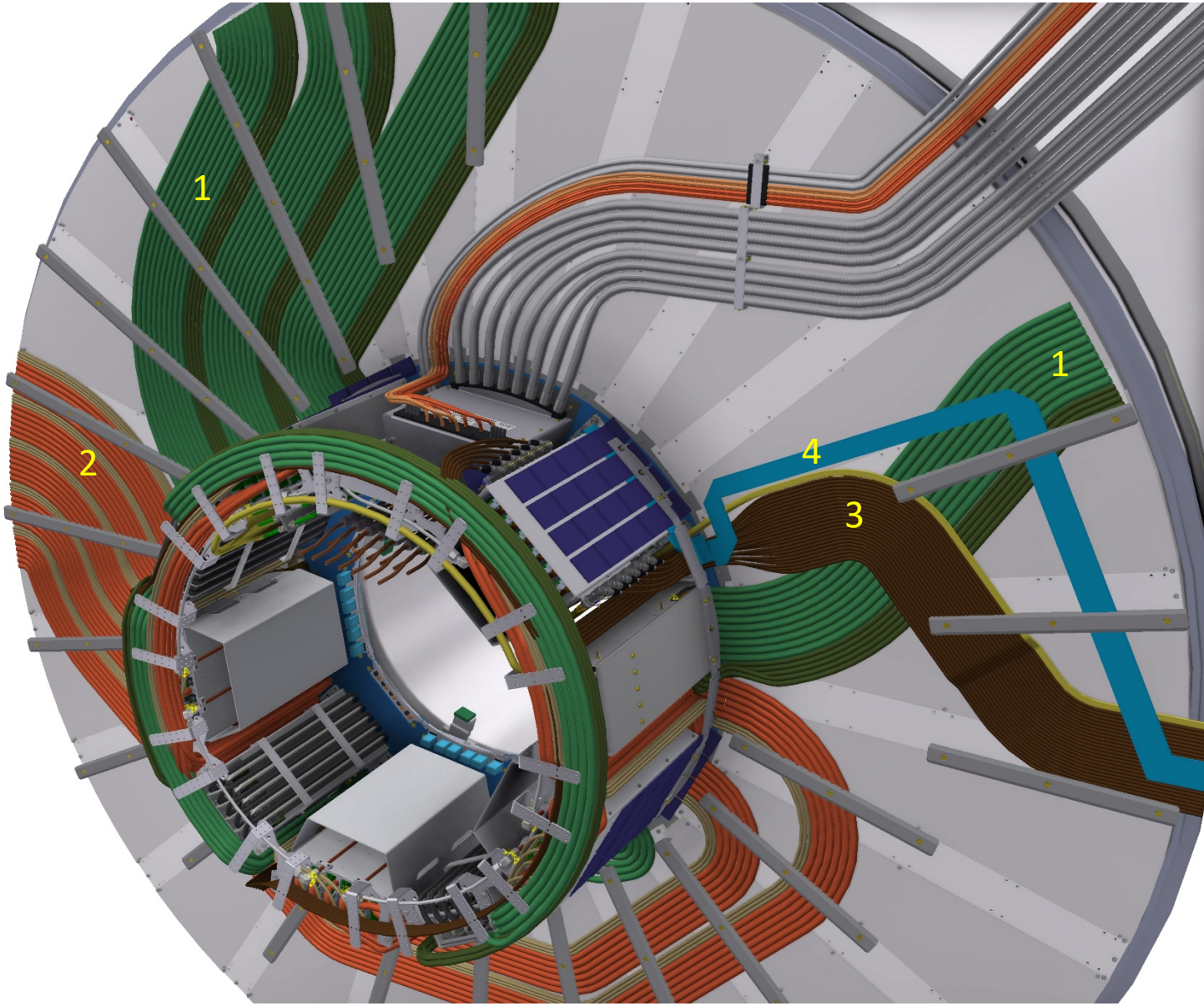

# Cable Routing on CDC BWD Side

Preview. Phase 3

1 : PXD Power
2 : SVD LV
3 : diamond signals
4 : NTC services
5 : SVD signal

Important:

PXD Power and SVD LV must be guided in ϕ on the DBS ring
(no space for crossing on the CDC wall )
(FWD side is easier)

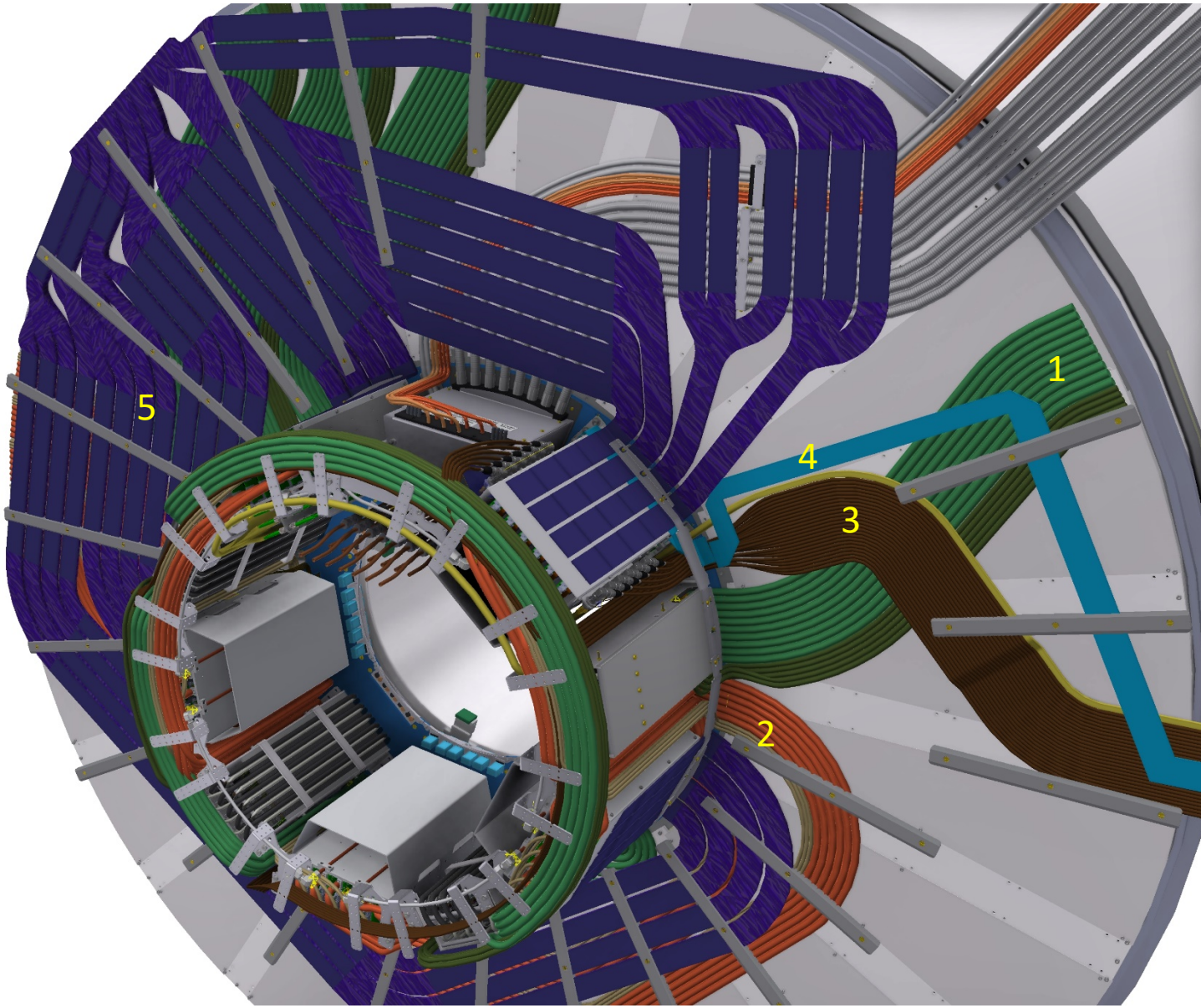

# Mechanical Tools for Phase 2 Detector

SCB Half—Shell: finalize design of CO2 tubes around the HM and endflange (where to place the Streuli-Connector -> in the region of the patch panels, connected after PP installation)

Ladder mount on SCB Half-Shell (2 ladders)

SCB half-shell for PXD ladders exist

to be done:

ceramic isolators on CO2 tubes (in warm dry volume)

(Swagelok isolator connections too large (25 mm)

SCB Support BWD and FWD, to be fixed on the beam pipe (design done)

Lowering Half Shell onto beampipe

| | |
|---|---|
| CDC Cable Cage | done (pictures) |
| Dock Box Support Ring FWD / BWD | done (parts already at KEK) |
| PXD / SVD Combs | done (at MPI) |

# Summary

- General ladder mounting procedure has been revised
- Phase 2 ladder mounting will be simplified relative to the full PXD (only two ladder on a half-shell, principles have been shown).
- Installation tools for the half-shells onto the beam pipe under development
- Patch Panel cable cage (3D printing) under development
- Tools for cabling from the VXD volume to the dock boxes (CDC cable cages) are produced and partly installed
- Dock rings and Dock Box Support Ring produced and at KEK

# Next Steps

- Details of the CO2 piping from the the SCB to the region outside of the VXD endflange need to be finlaized, such as

  - Galvanic isolation (ceramic inserts)
  - Location of Streuli connectors (perferably close to the VXD endflange)

- Production of 2nd SCB half-shell for Phase 2 has started

- Method for closing the Warm Dry Volume under discussion

- Schedule for finishing all mechanical tasks for Phase 2 is tight

# Backup

# VXD Nomenclature