Interplay of Python Scripts, EPICS, BonnDAQ, DHH and JTAG + Examples of Application

Jochen Dingfelder, Leonard Germic, Tomasz Hemperek,
Hans Krüger, Barbara Leibrock, Florian Lütticke, Carlos Marinas,
Botho Paschen and Norbert Wermes

University of Bonn

21st International Workshop on DEPFET Detectors and Applications

29th May 2017

Overview of the Laboratory Slow Control and two Measurements

Jochen Dingfelder, Leonard Germic, Tomasz Hemperek,
Hans Krüger, Barbara Leibrock, Florian Lütticke, Carlos Marinas,
Botho Paschen and Norbert Wermes

University of Bonn

21st International Workshop on DEPFET Detectors and Applications

29th May 2017

How does the test system work?

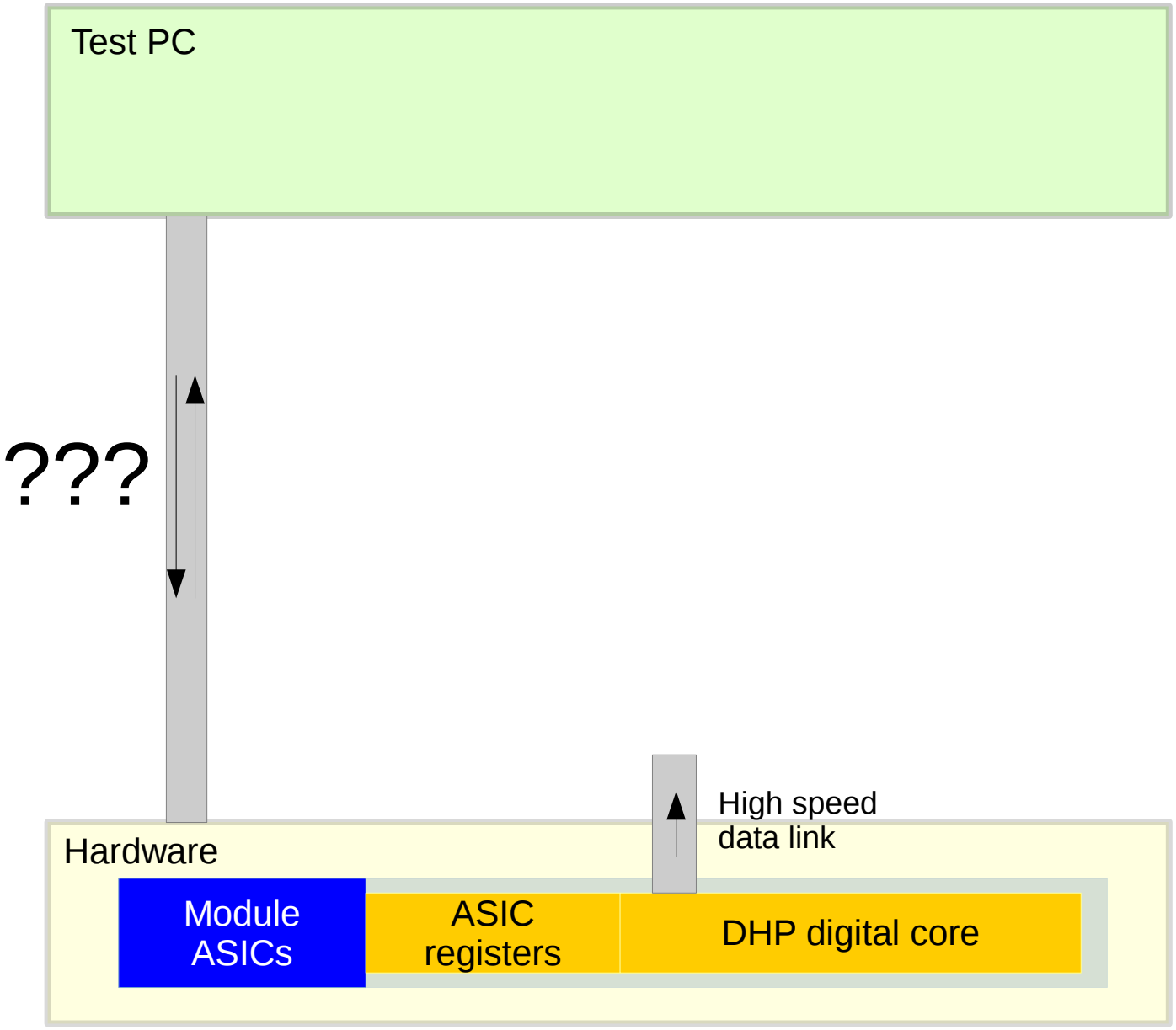

CS-Studio and python

UNIVERSITÄT BONN

Test PC

Application layer

Python scripts / CS-Studio

???

```python
# enable triggering
trigger_enable = \
  get_pv("PXD:H1021:trg_en:S:set")
trigger_enable.put(1)

# check link status
link_status_pv = \
  get_pv("PXD:H1021:dhp1_channel_up:S:cur")
link_ok = link_status_pv.get()

if not link_ok:
      print("DHP link 1 is down")

# set DHP CML bias value
# and write to DHP JTAG register
get_pv(DHP, "idac_tx_bias:VALUE:set").put(200)
get_pv(DHP, "globalrs:trg:set").put(1)
```

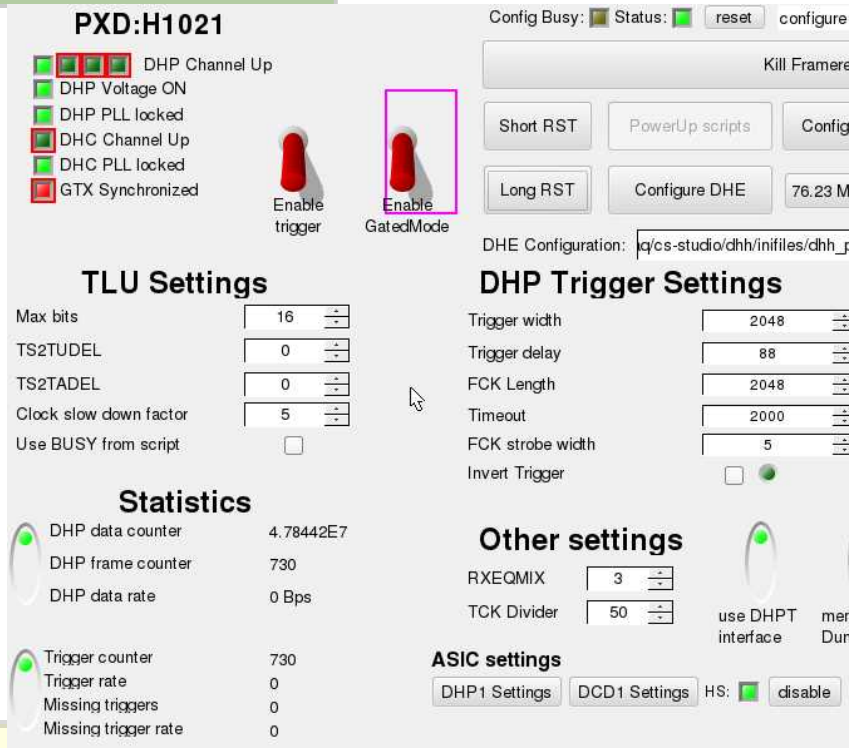

High speed data link

Hardware

Module ASICs

ASIC registers

DHP digital core

Process Variables (PVs)

UNIVERSITÄT BONN

Test PC

Application layer

Python scripts / CS-Studio

Read/write

EPICS IOC server

Process Variables (PVs)

???

```
# check link status
link_status_pv = \
  get_pv("PXD:H1021:dhp1_channel_up:S:cur")
link_ok = link_status_pv.get()

if not link_ok:
      print("DHP link 1 is down")

# set DHP CML bias value
# and write to DHP JTAG register
get_pv(DHP, "idac_tx_bias:VALUE:set").put(200)
get_pv(DHP, "globalrs:trg:set").put(1)
```

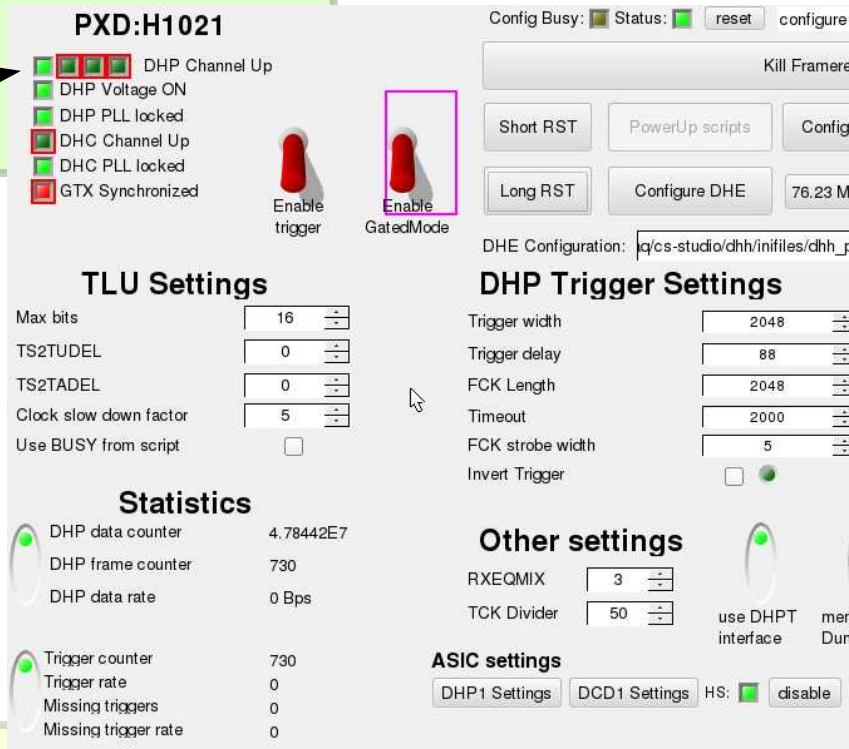

High speed data link

Hardware

Module ASICs

ASIC registers

DHP digital core

The Data Handling Enginge (DHE)

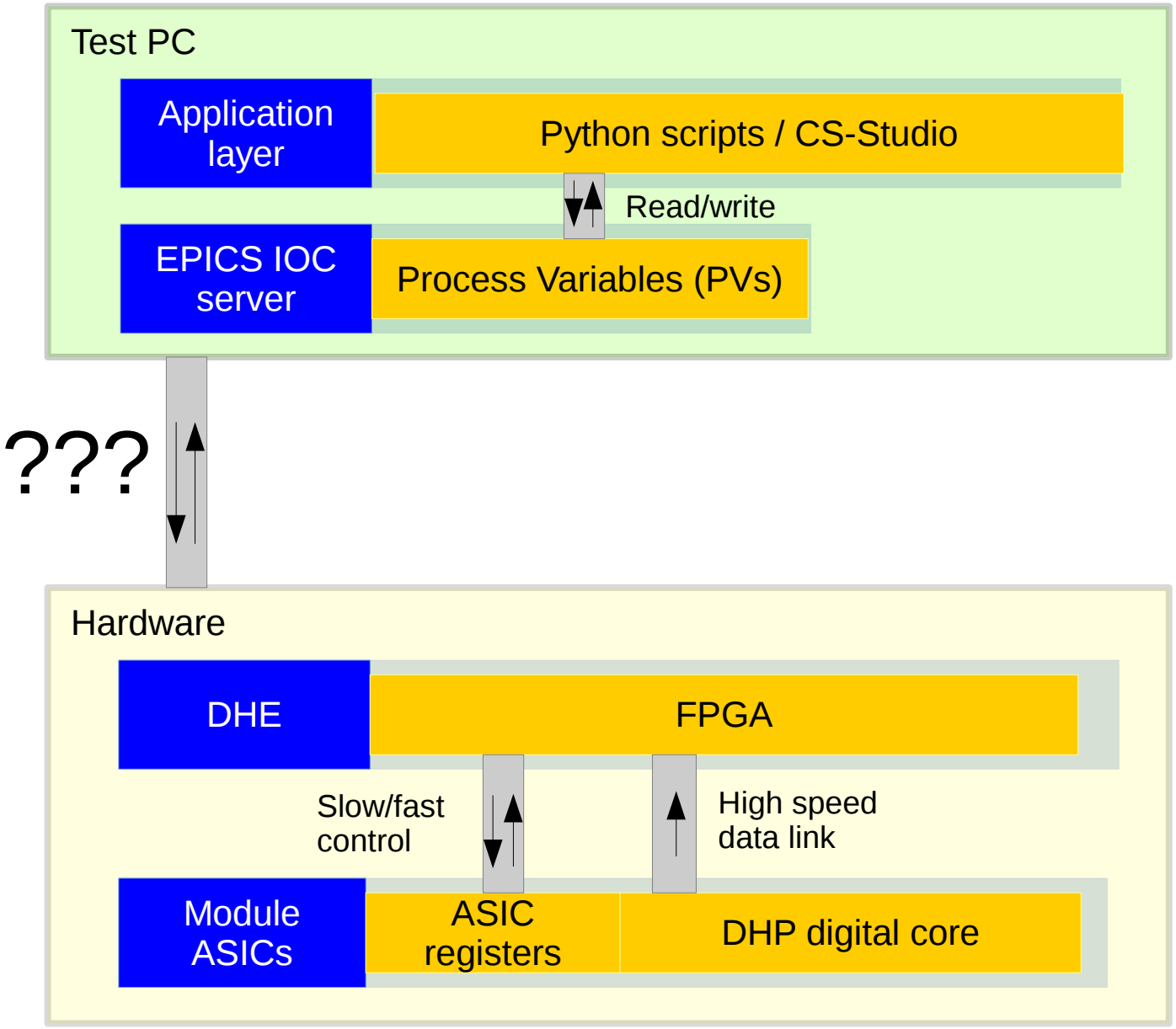

DHE ↔ module ASIC communication

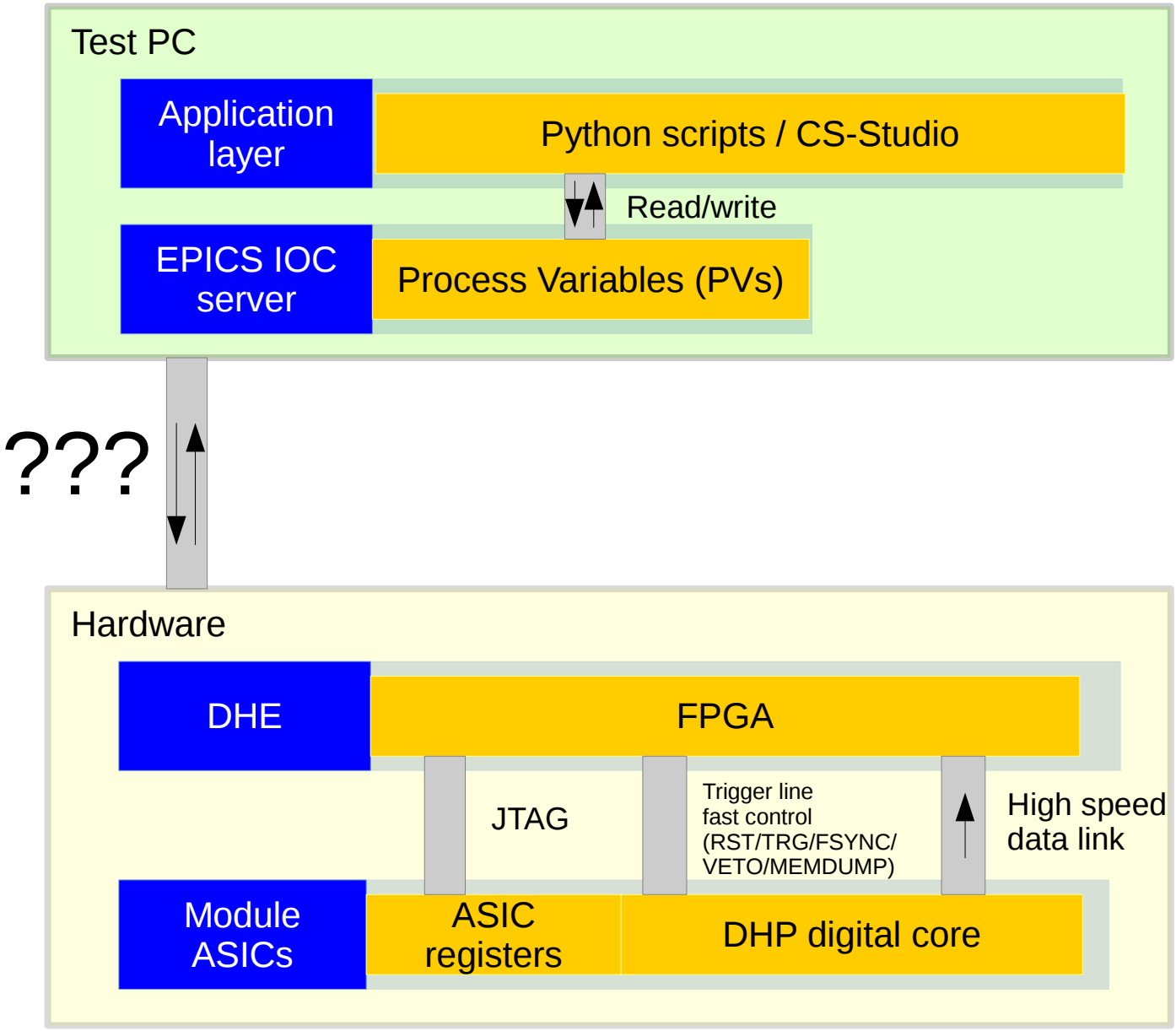

PC ↔ DHE communication

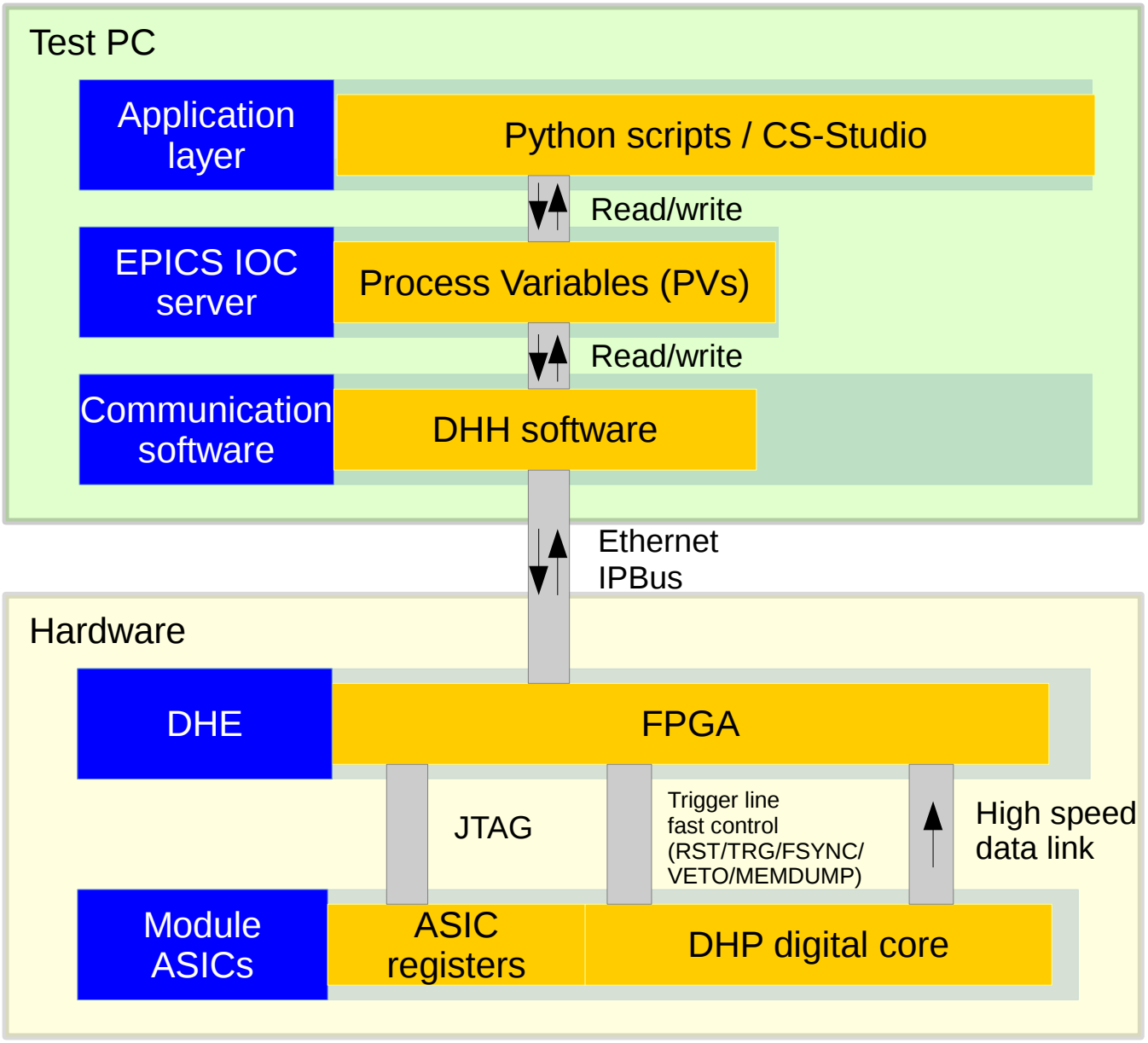

Data aquisition

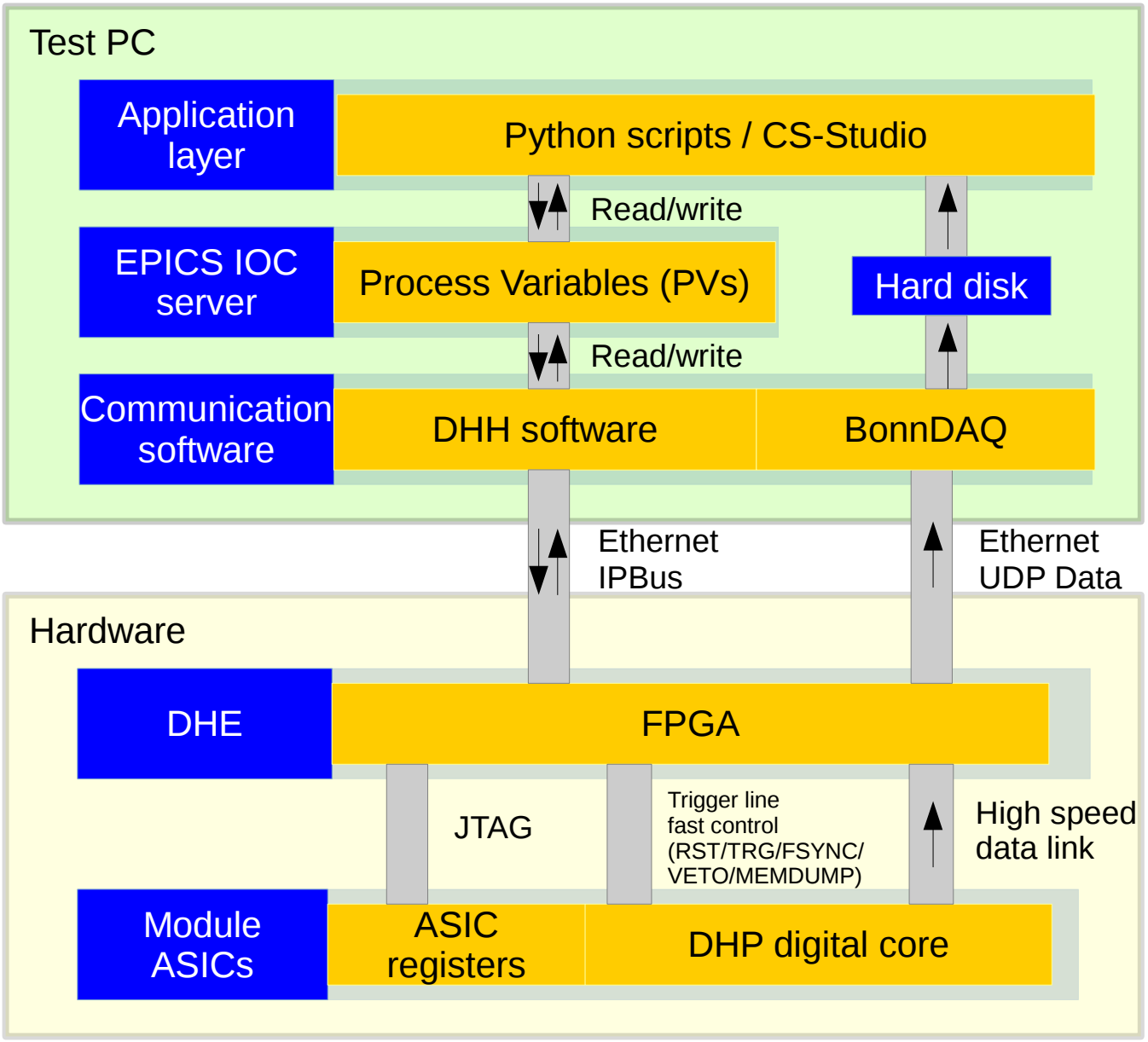

Why is it so complicated?

Laboratory Test System

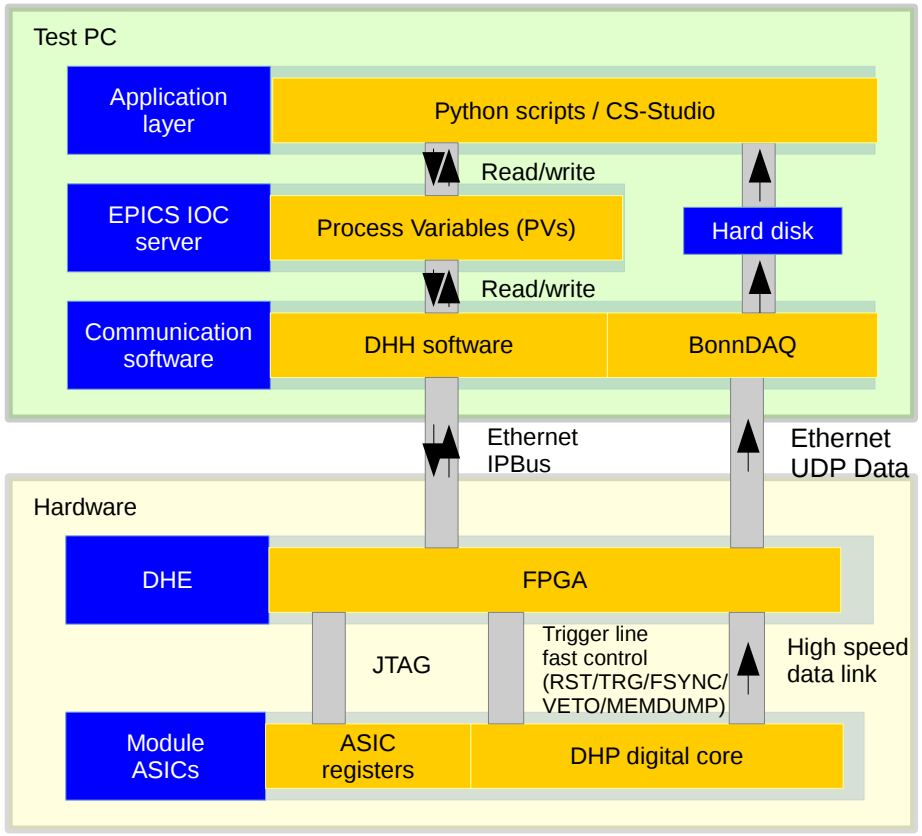

Why is it so complicated?

UNIVERSITÄT BONN

Laboratory Test System

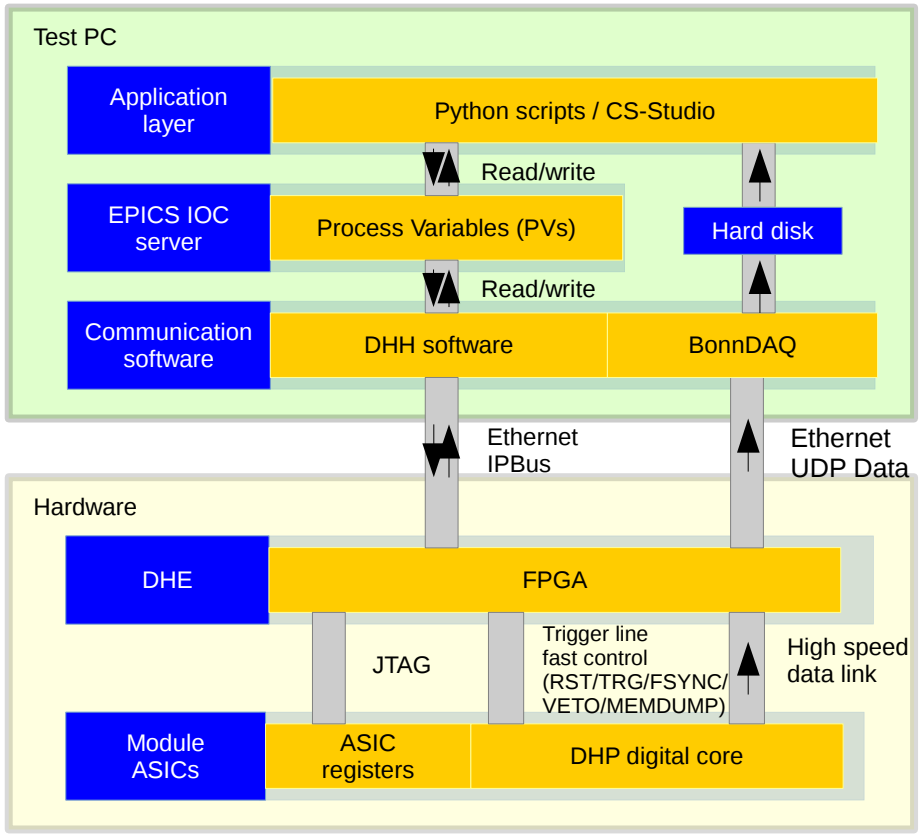

Belle II Experiment (also **PERSY**)

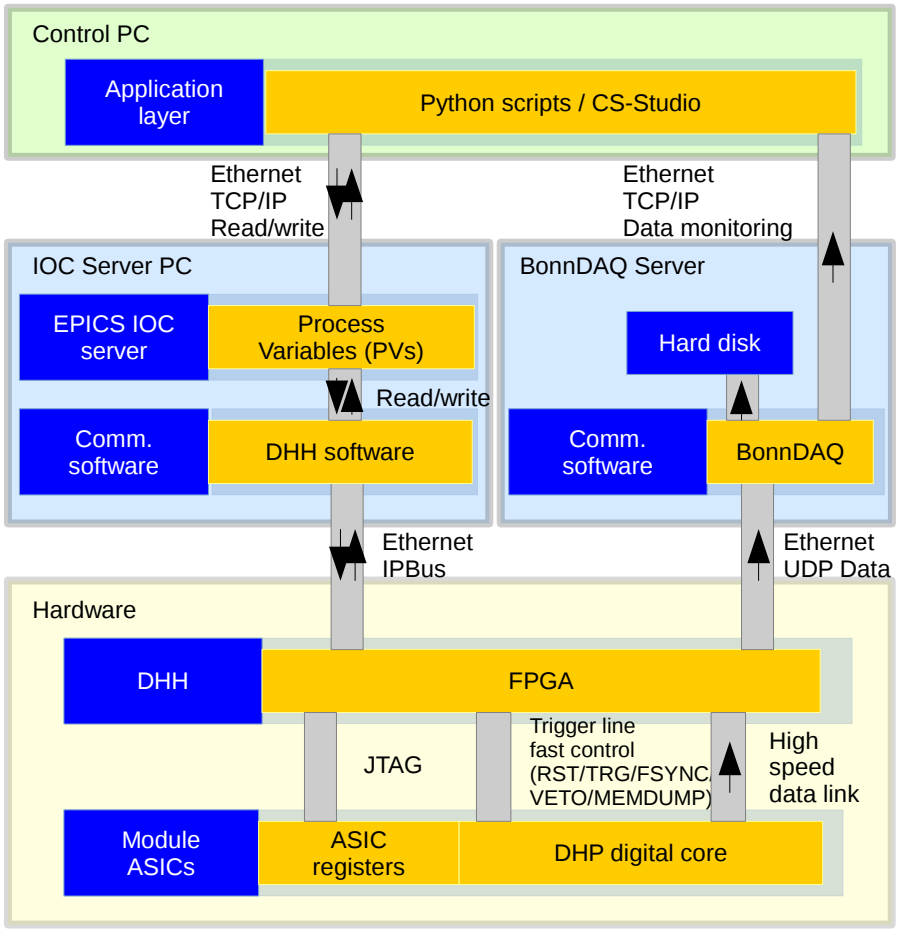

→ The system used for laboratory testing already implements (almost) all the elements for the final Belle II experiment.

Keep track of what you're doing

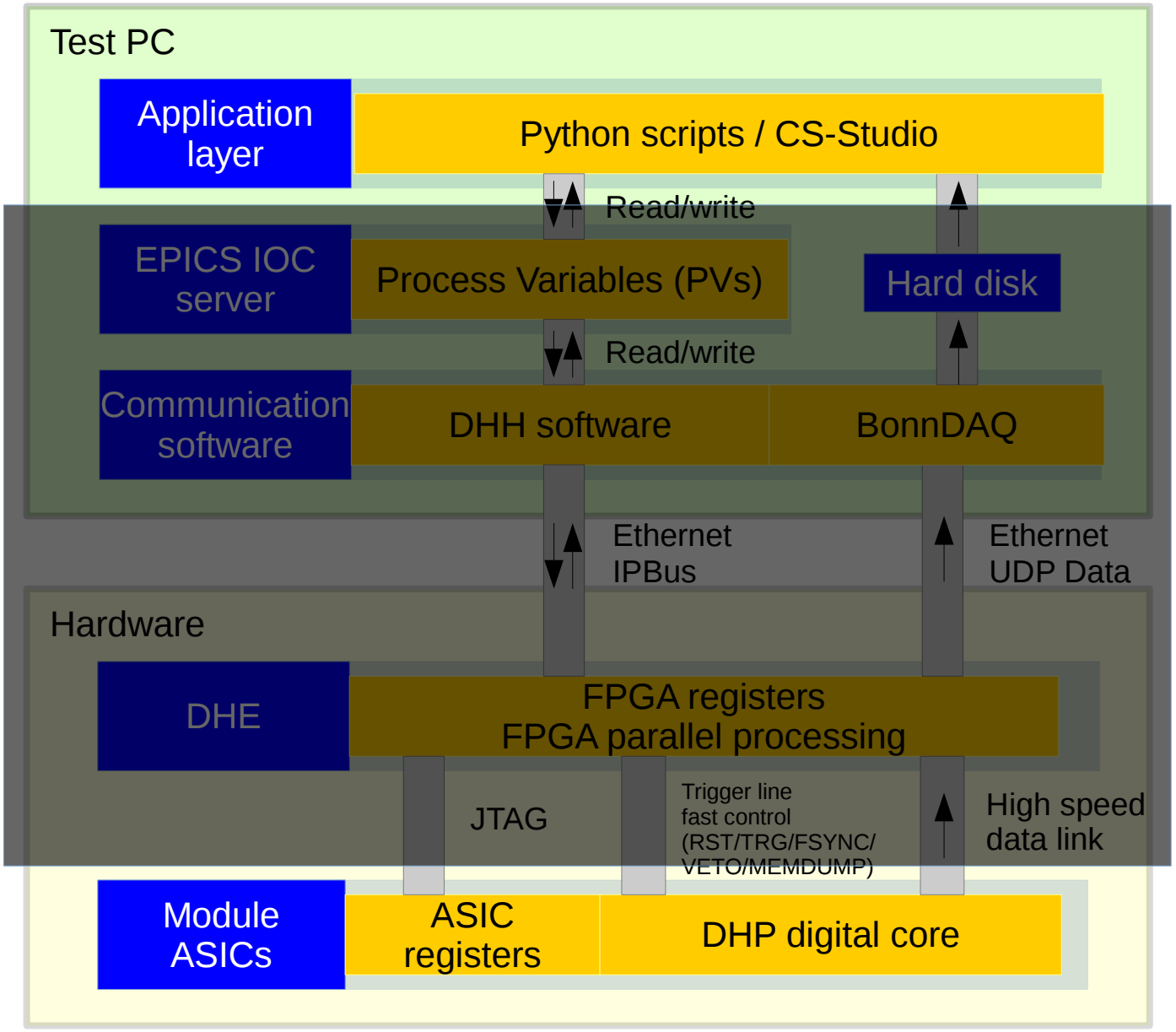

- Slow control close to final state
- Can be difficult to debug in the lab environment
- Designing fast scans can be tricky

Timing pitfall – high-speed link scan

High-speed signal preemphasis

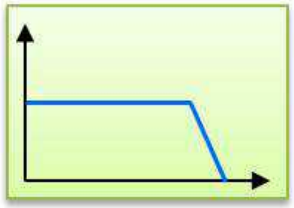

Signal spectrum

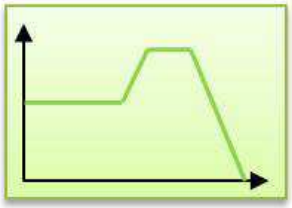

Signal spectrum after preemphasis

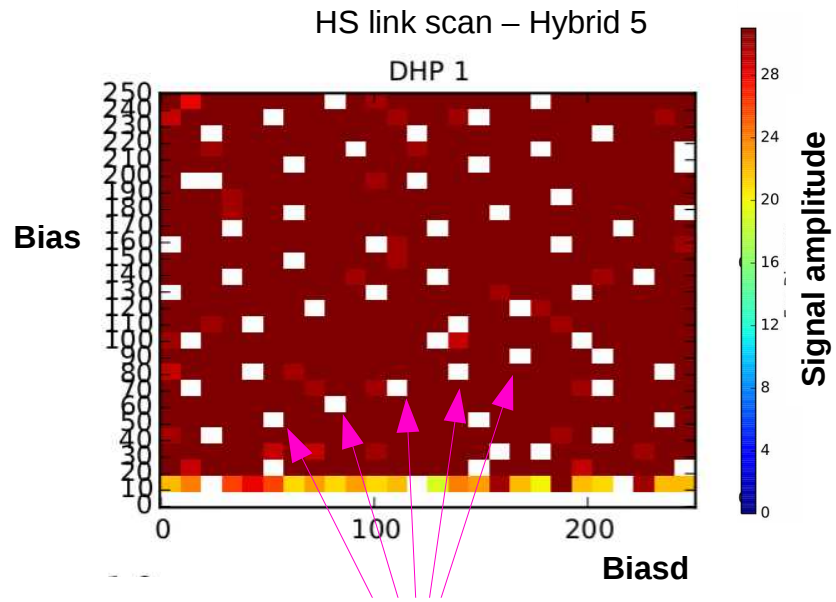

What are these “bad points”?
- are they real?
- why are they so regular?

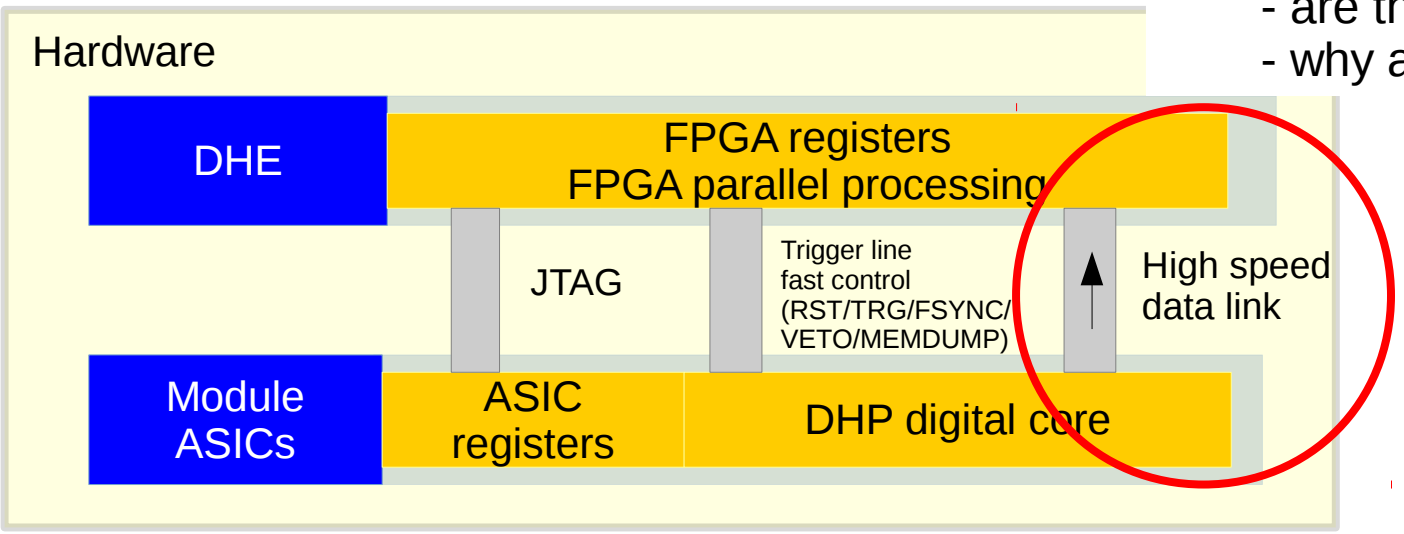

What happens during the scan

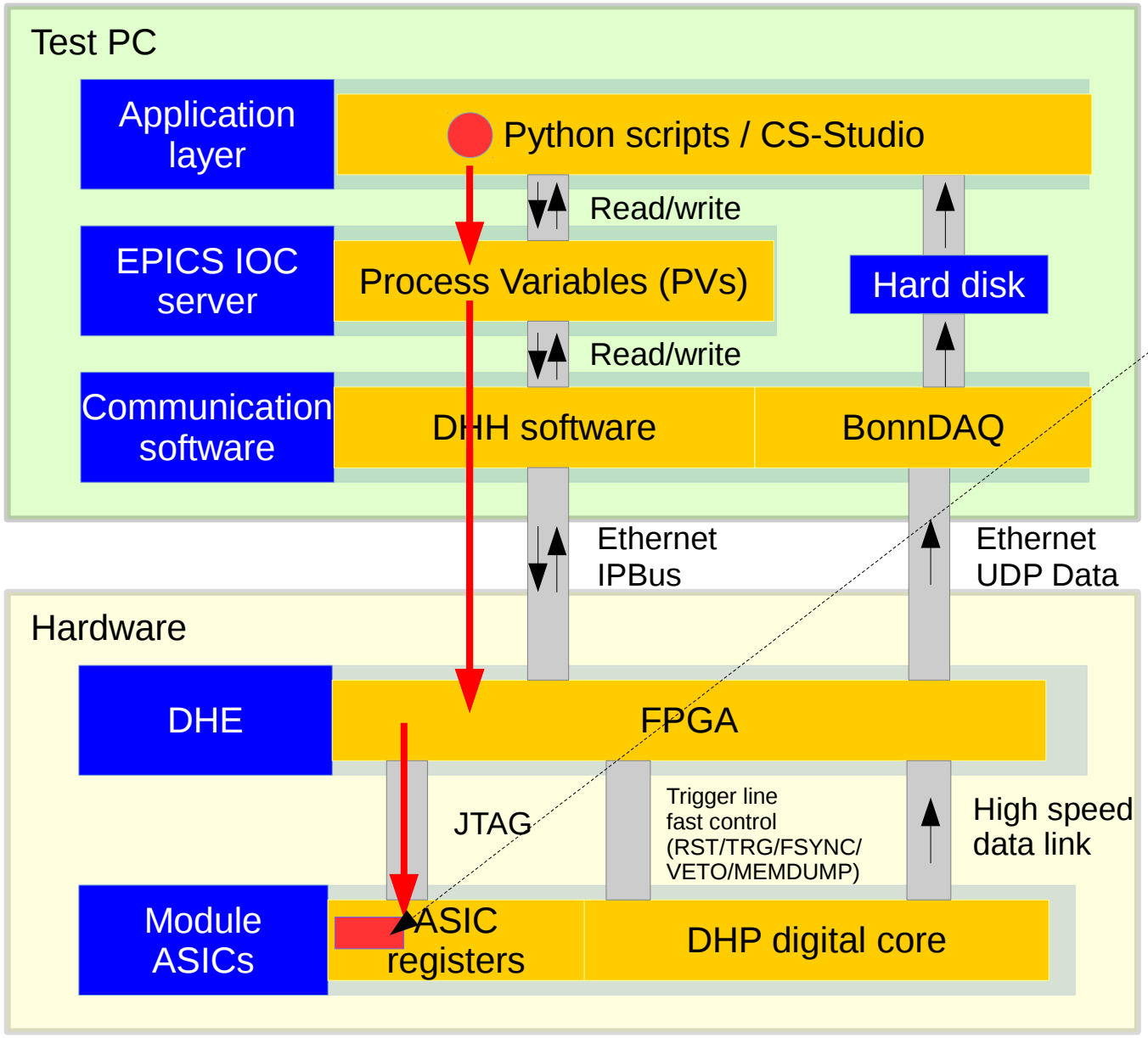

1. set pre-emphasis parameters in DHP

bias
biasd

What happens during the scan

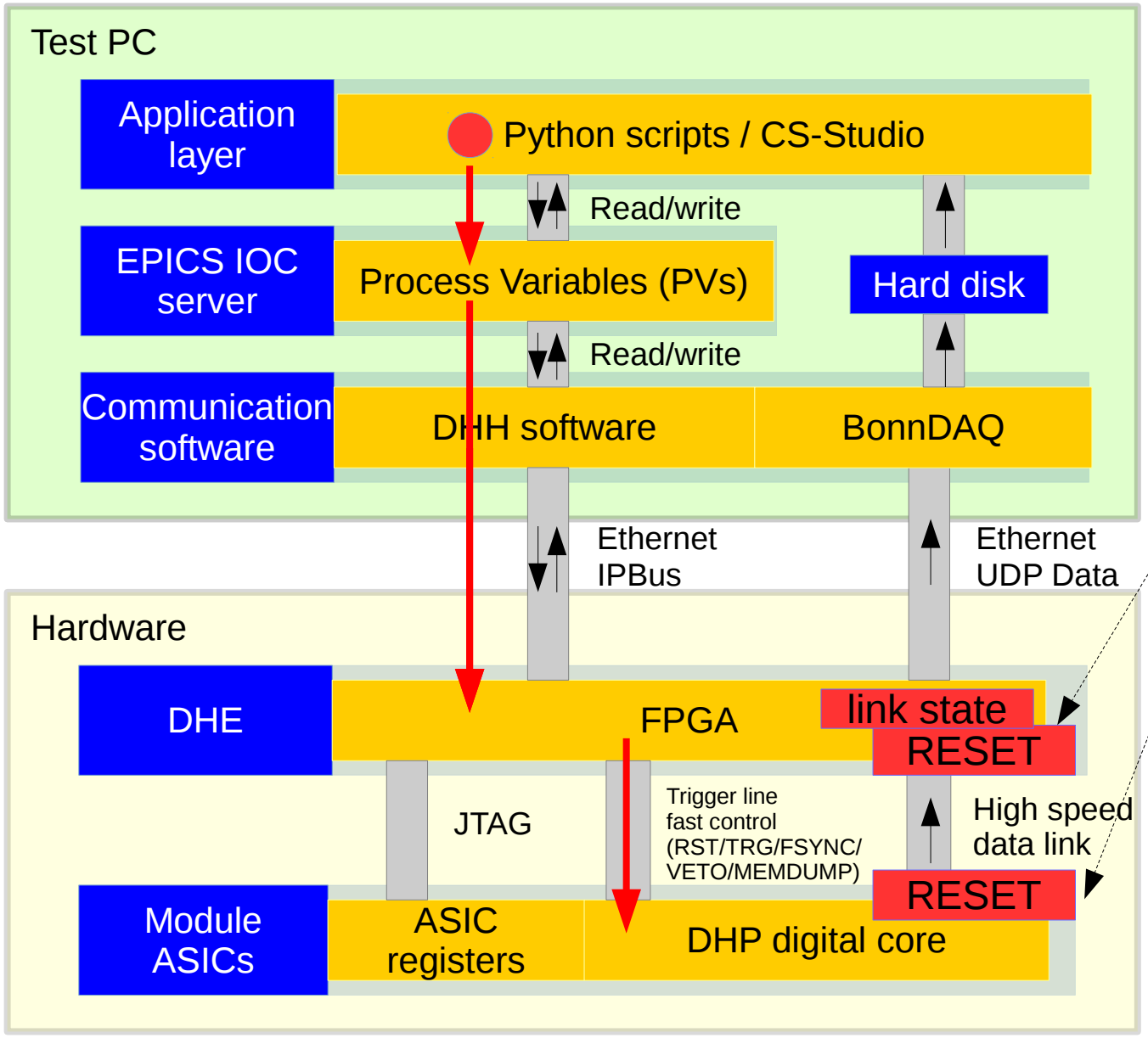

1. set pre-emphasis parameters in DHP

bias
biasd

2. issue link reset commands

What happens during the scan

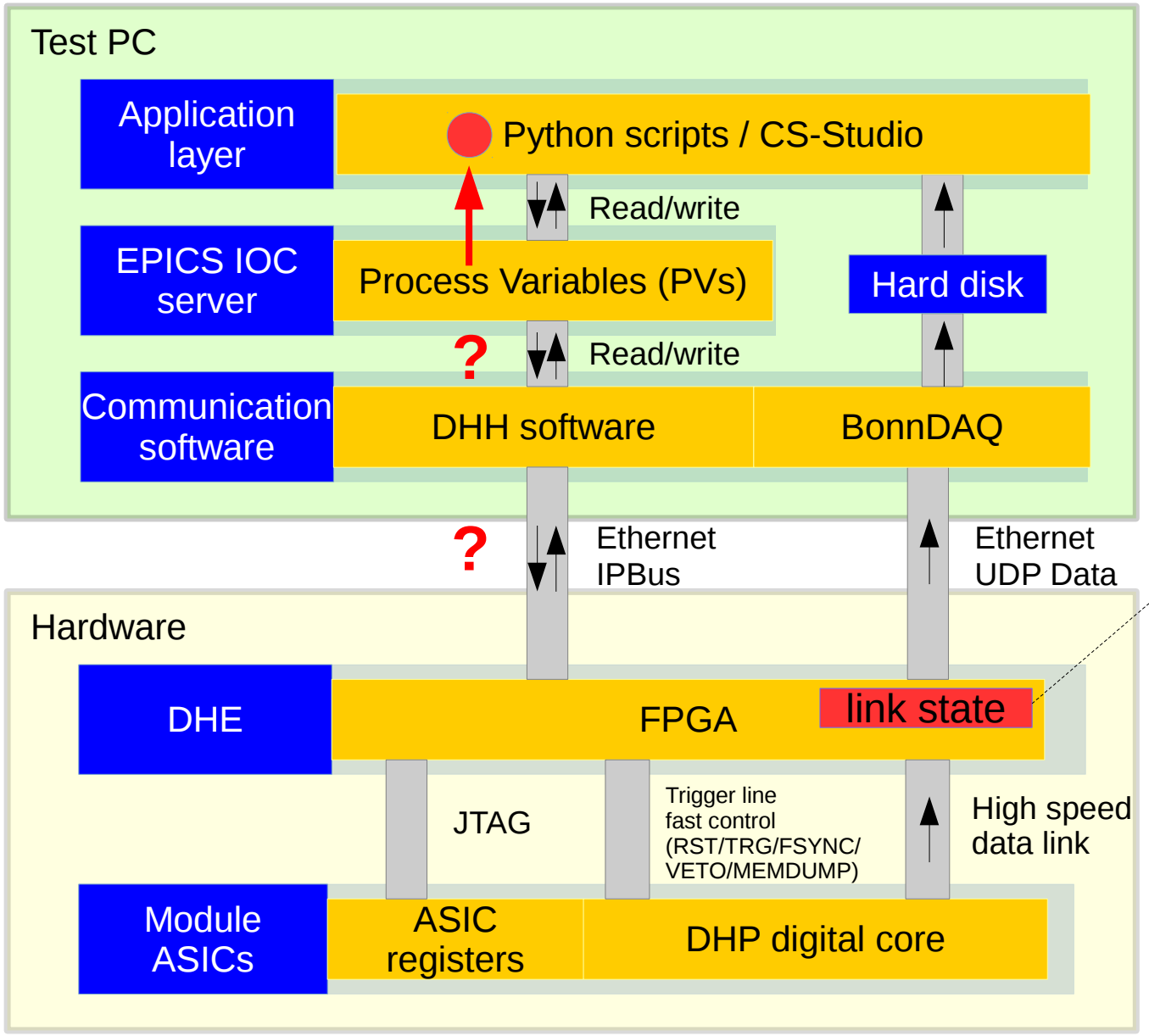

1. set pre-emphasis parameters in DHP

   bias
   biasd

2. issue link reset commands

3. poll link state (success?)

What happens during the scan

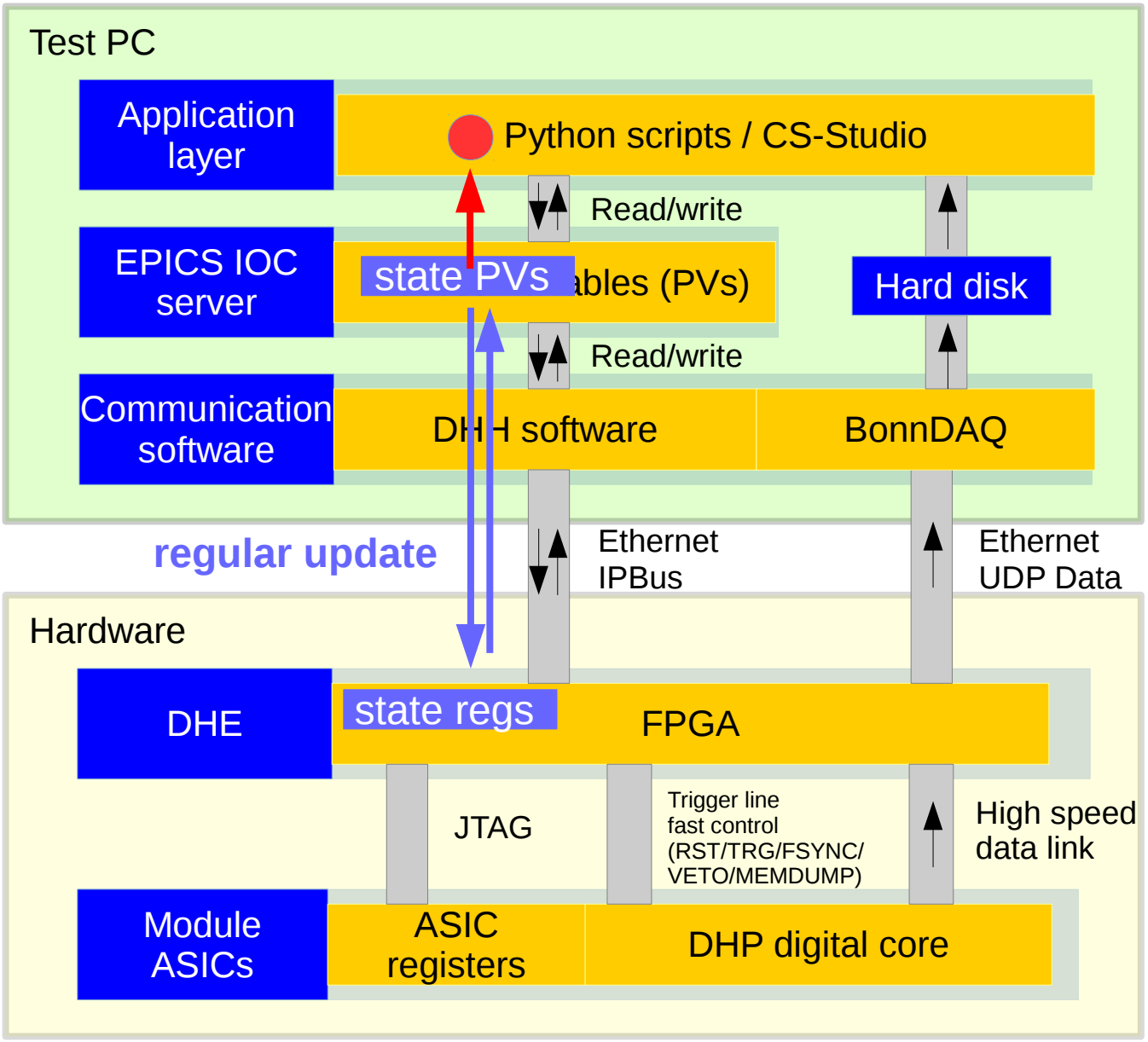

1. set pre-emphasis parameters in DHP

   bias
   biasd

2. issue link reset commands

3. poll link state (success?)
   - PV value scan time typically 1s

   → Information can be up to 1s old!

Timing is everything

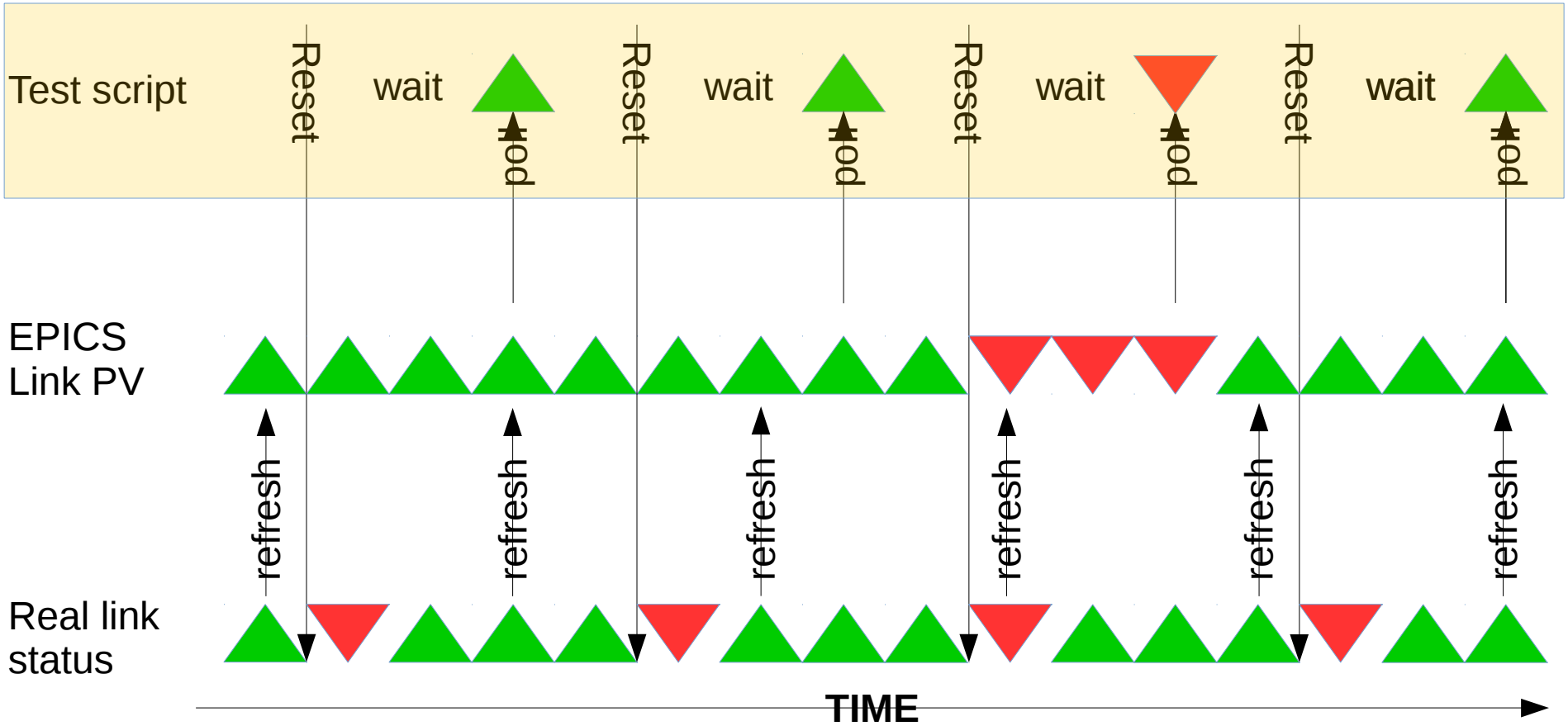

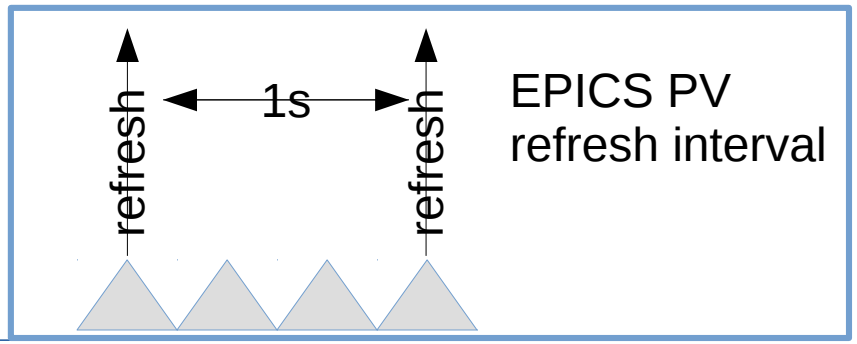

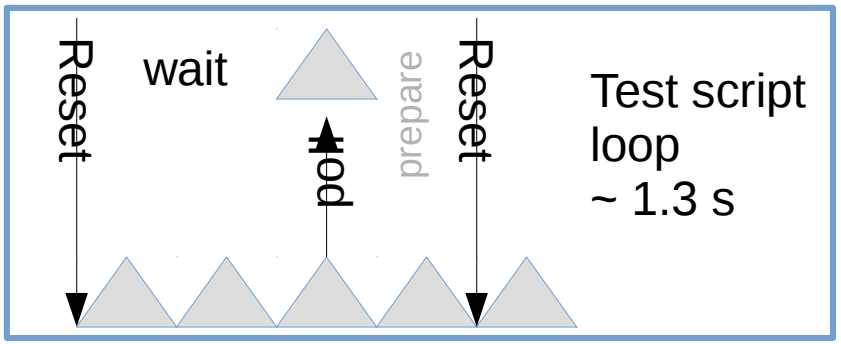

Pedestals at PERSY

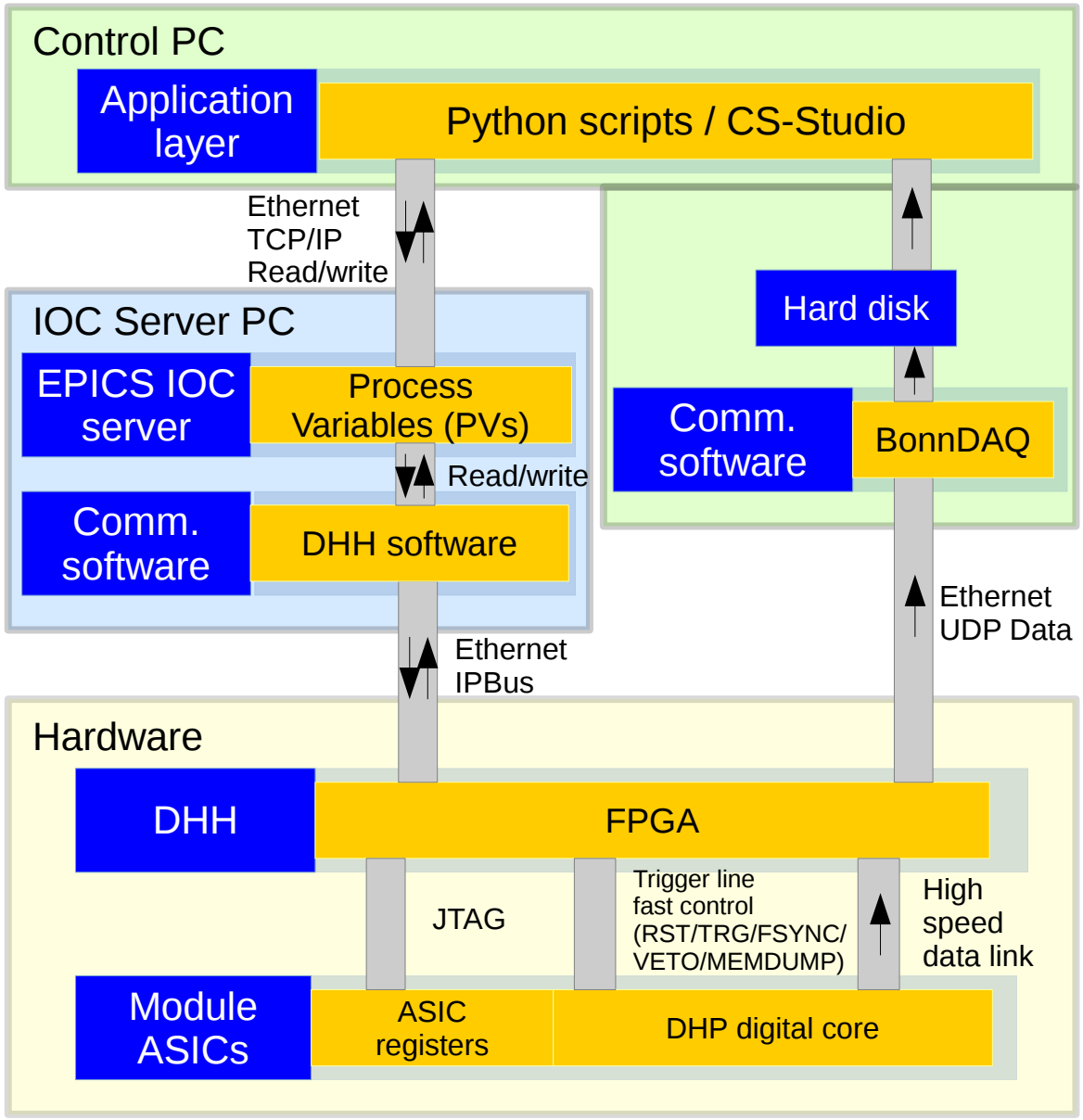

- Close to final phase 2 system:
  - Dedicated IOC Server
  - DHH system:
    DHE + DHC
  - Further DAQ:
    DATCON
    ONSEN
    PocketDAQ
  - SVD system

→ <u>Demonstrates what's left to do</u>

Pedestals at PERSY – special triggering

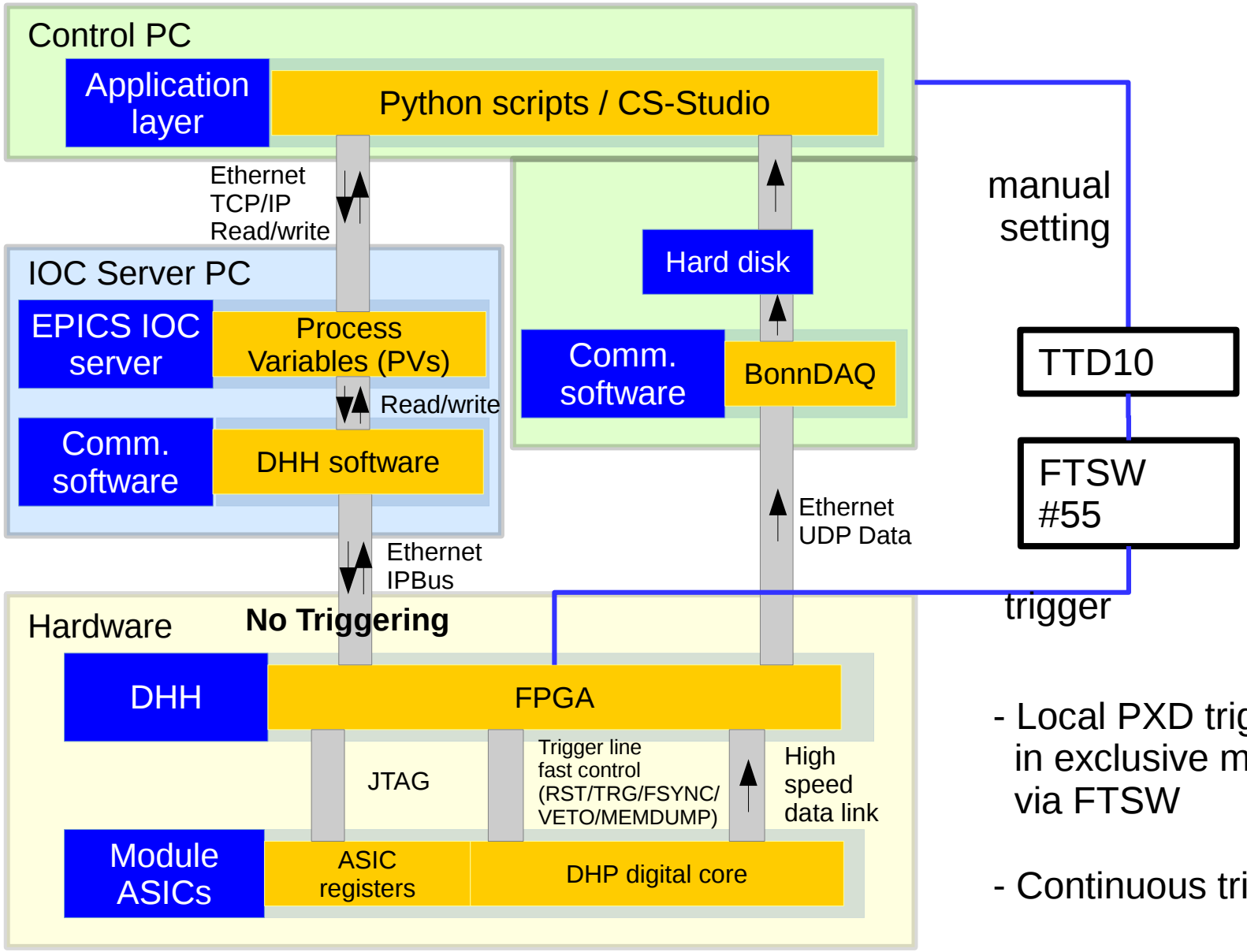

- Local PXD triggering in exclusive mode via FTSW

- Continuous triggering

Pedestals at PERSY – special triggering

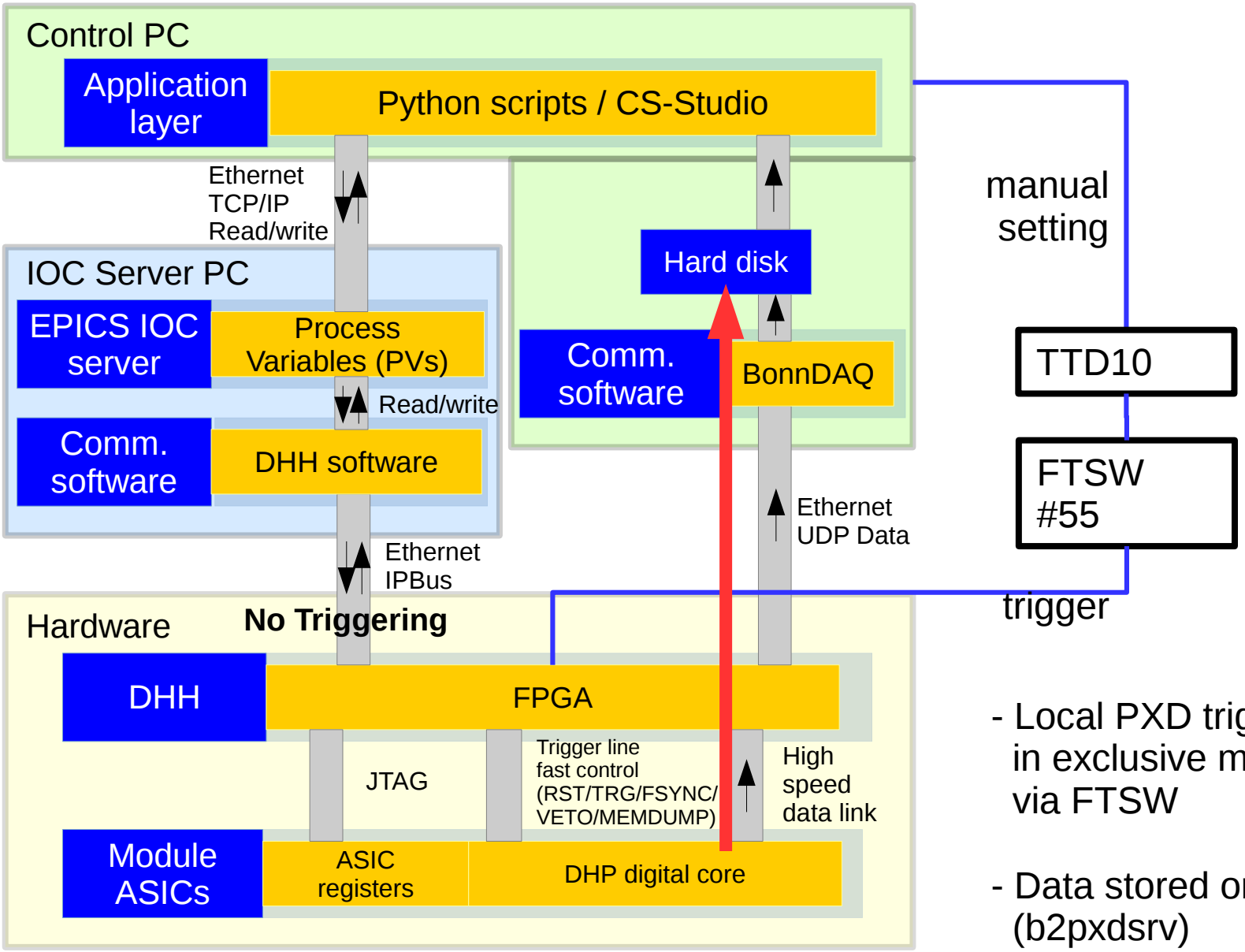

- Local PXD triggering in exclusive mode via FTSW

- Data stored on control PC (b2pxdsrv)

W30_IB (Module 1012) @ PERSY

- pedestals on 20th May 2017
- MARCO constant 10 °C

W30_IB: DHPT1.1, DCDpp

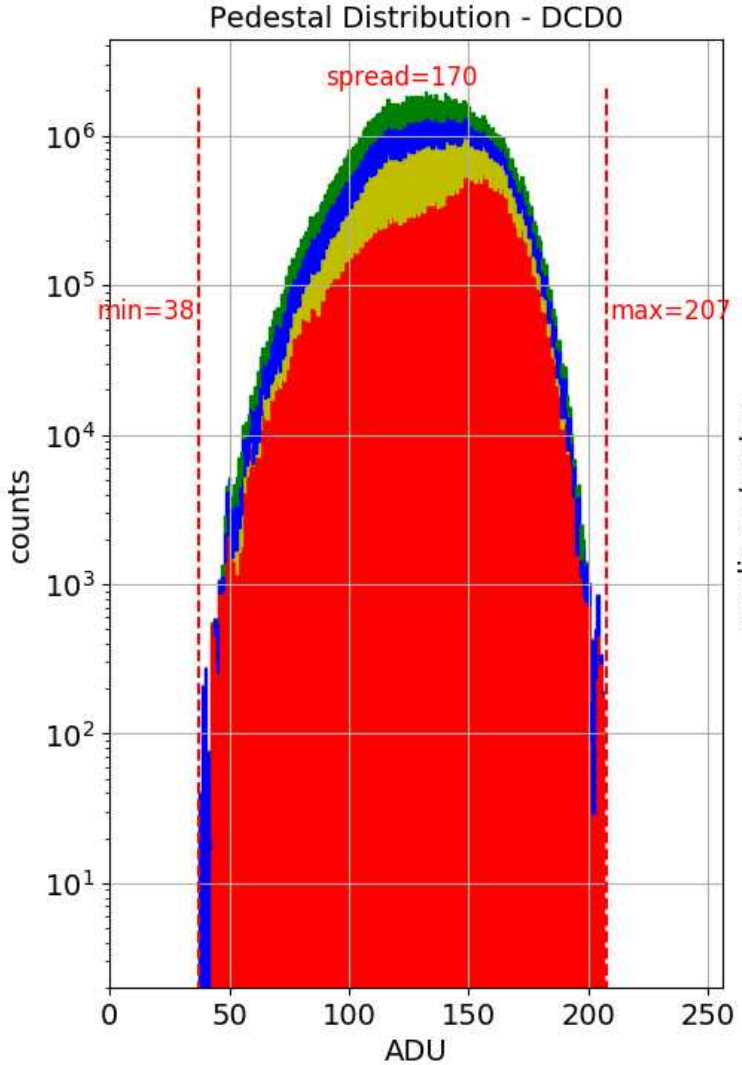

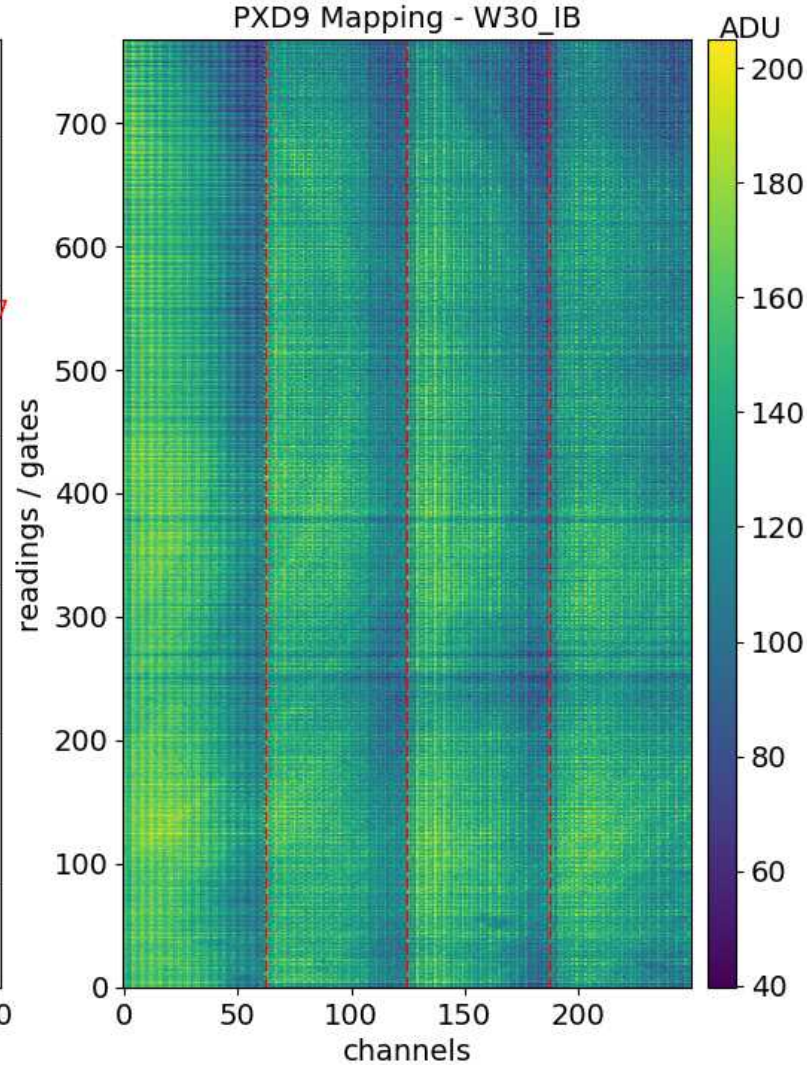

W30_IB (Module 1012) @ PERSY

- pedestals on 22th May 2017
- MARCO constant 10 °C

W30_IB: DHPT1.1, DCDpp

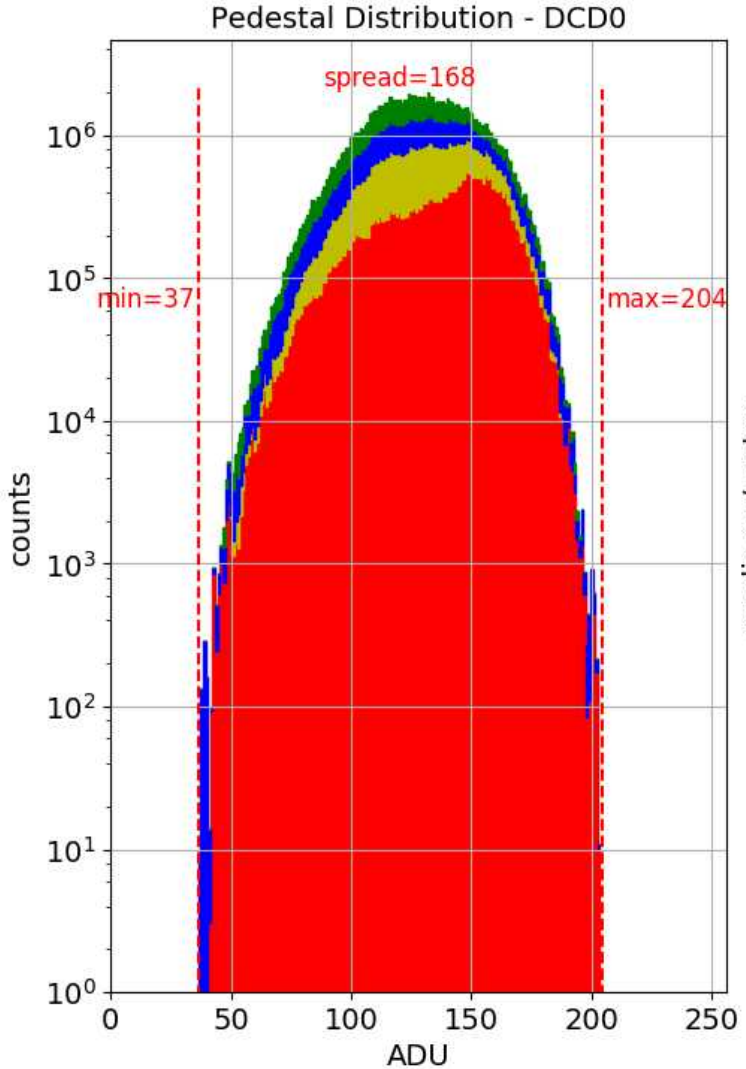

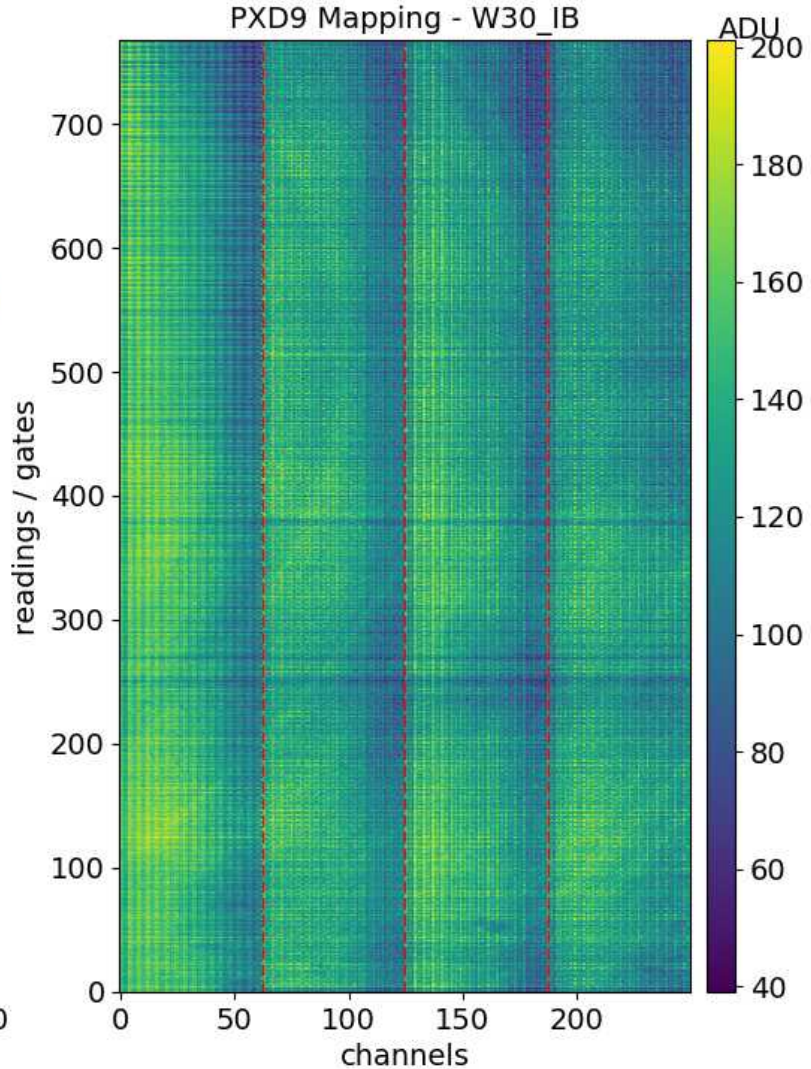

W30_IB (Module 1012) @ PERSY

- relative change in pedestals
- 30s x 20 raw frames/s, every 30 minutes

W30_IB:
DHPT1.1, DCDpp

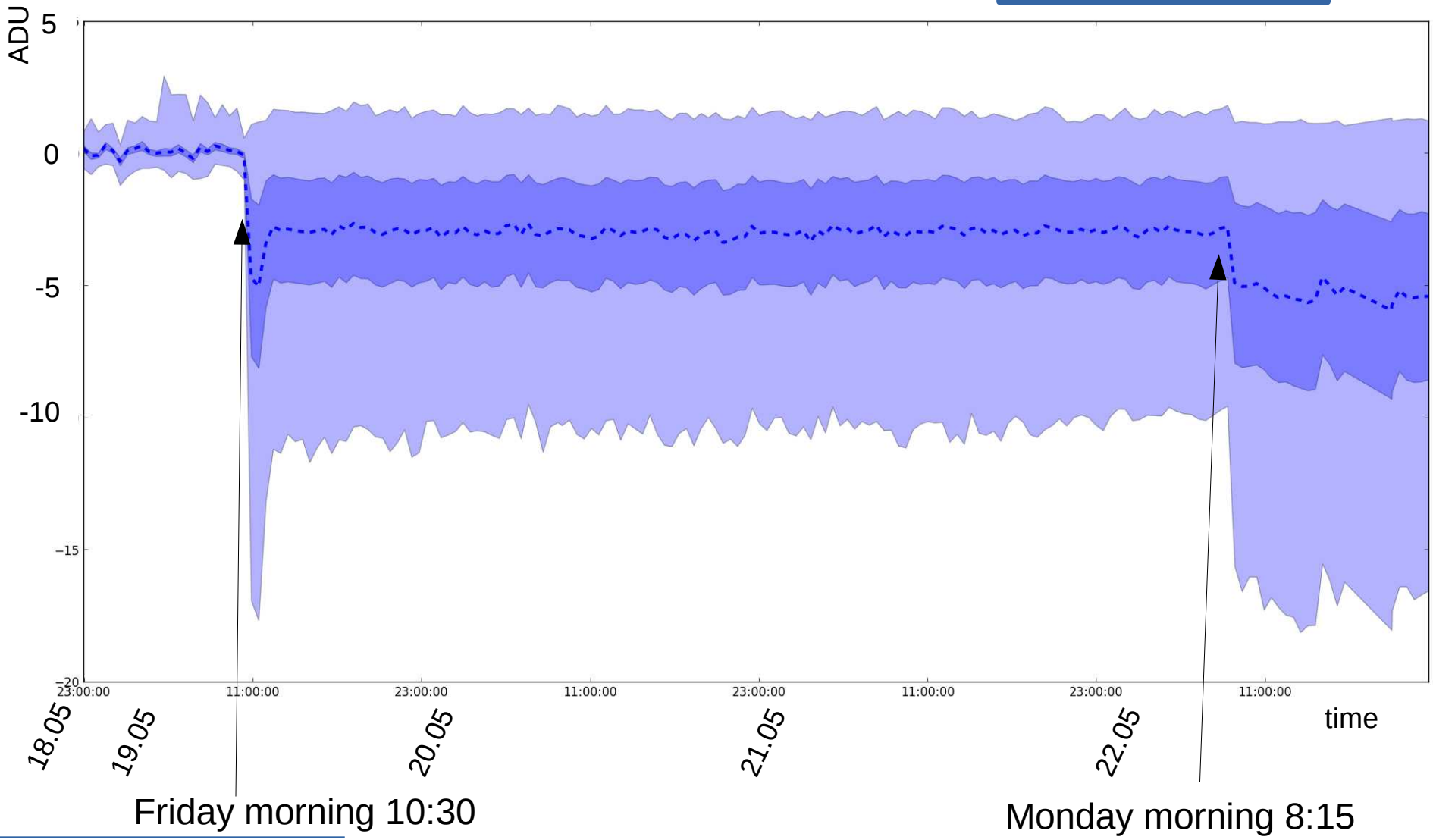

W30_IB (Module 1012) @ PERSY

- relative change in pedestals

W30_IB:
DHPT1.1, DCDpp

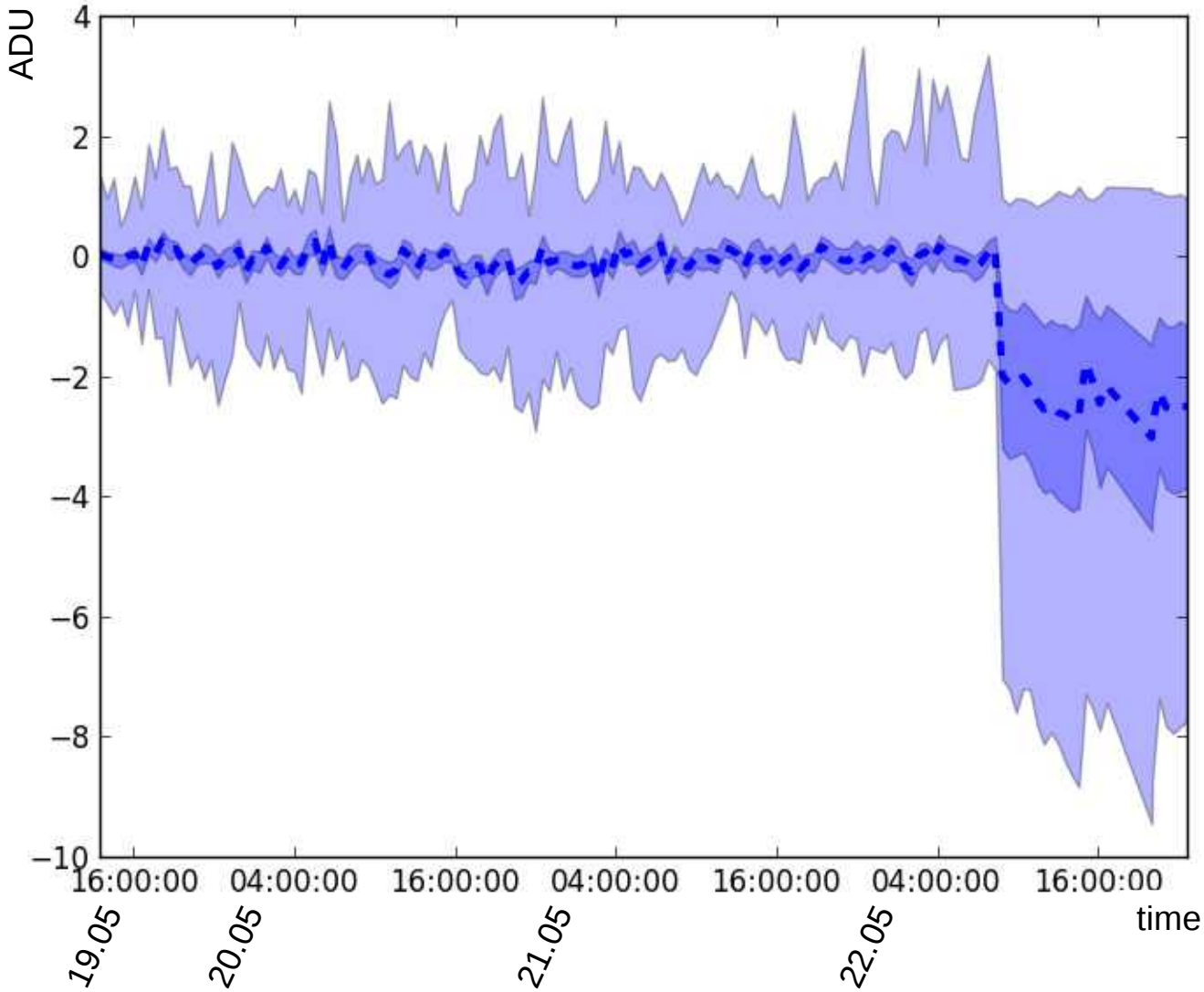

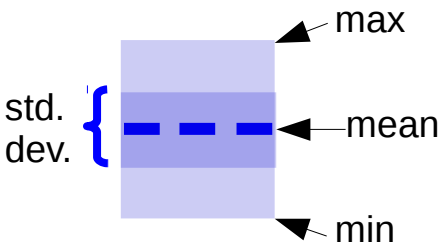

Conclusion

- Slow control for final experiment already used in laboratory environment
  - To perform fast scans, careful programming is necessary
- PERSY system allows basic PXD long term studies
  - “Local” triggering mechanism still an open issue
- Old TB 2016 W30_IB module shows acceptable pedestal stability over long time: < 3 ADU in 2 days

Thank you