First results from test runs with compact commercial CO_2 cooling unit

Ulrich Leis, Hans-Günther Moser, Sven Vogt, Stefan Horn

Carrier LT75 (watercooled)

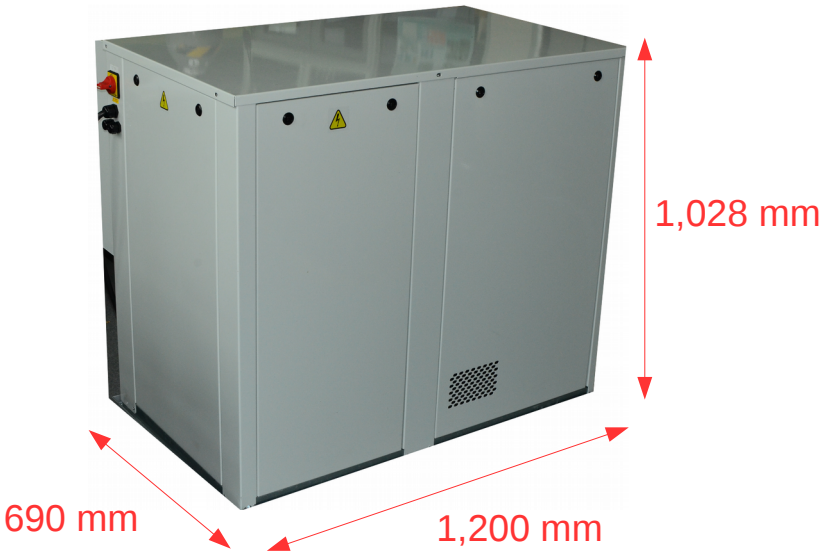

CO_2	**Refrigerant**
4.5 kg	**Fill quantity**
110 g	**Oil fill quantity**
185 kg	**Weight**
3 kW	**Cooling capacity**
2 rotary hermetic Toshiba MT: 55 bar, LT: 35 bar	**Compressor**
€ 10,000 $ 11,000	**Costs of purchase (basic unit)**
-30 °C	**Evap. temperature**

Carrier LT75 (watercooled) IBBelle

0.9 m3

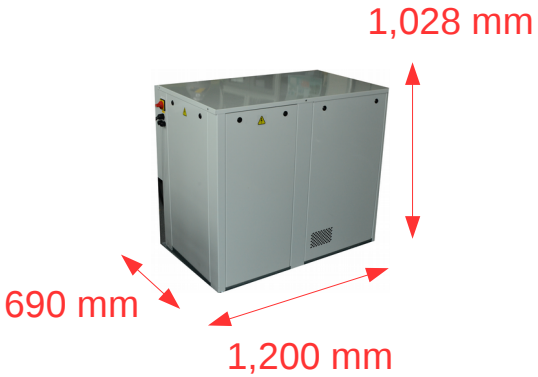

19 m3

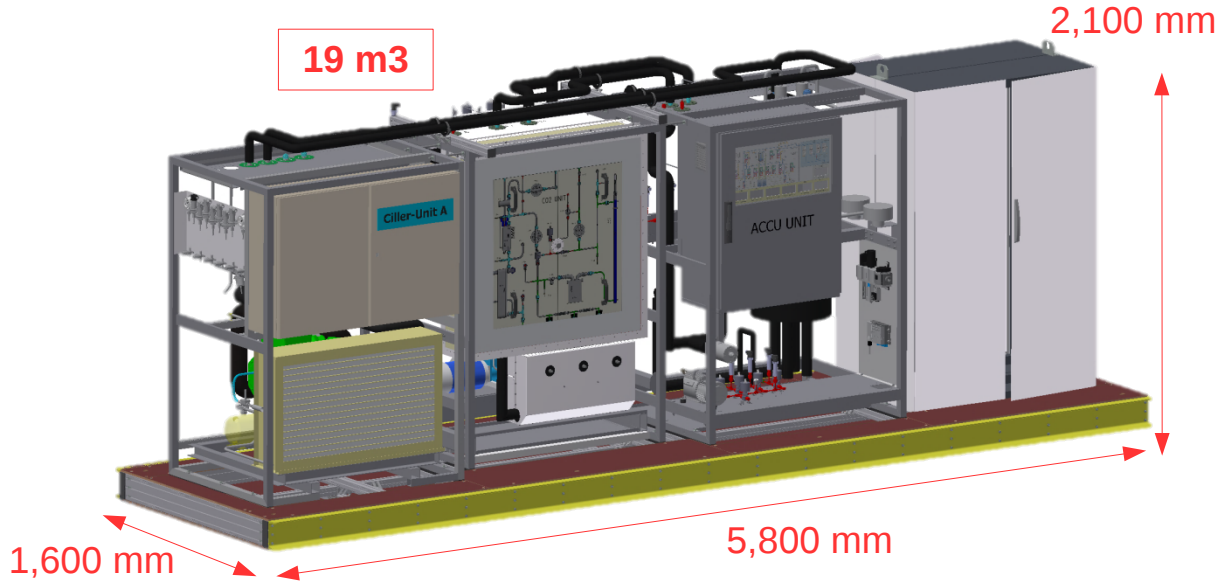

CO_2	**Refrigerant**	Freon, CO_2
4.5 kg	**Fill quantity**	12 kg, 25 kg
110 g	**Oil fill quantity**	3,000 g
185 kg	**Weight**	**3,000 kg**
3 kW	**Cooling capacity**	**3 kW**
2 rotary hermetic Toshiba MT: 55 bar, LT: 35 bar	**Compressor**	2-stage Bitzer
€ 10,000 $ 11,000	**Costs of purchase (basic unit)**	**€ 150,000** $ 173,000
-30 °C	**Evap. temperature**	**-30 °C**

Carrier LT75 (watercooled) - P & I -

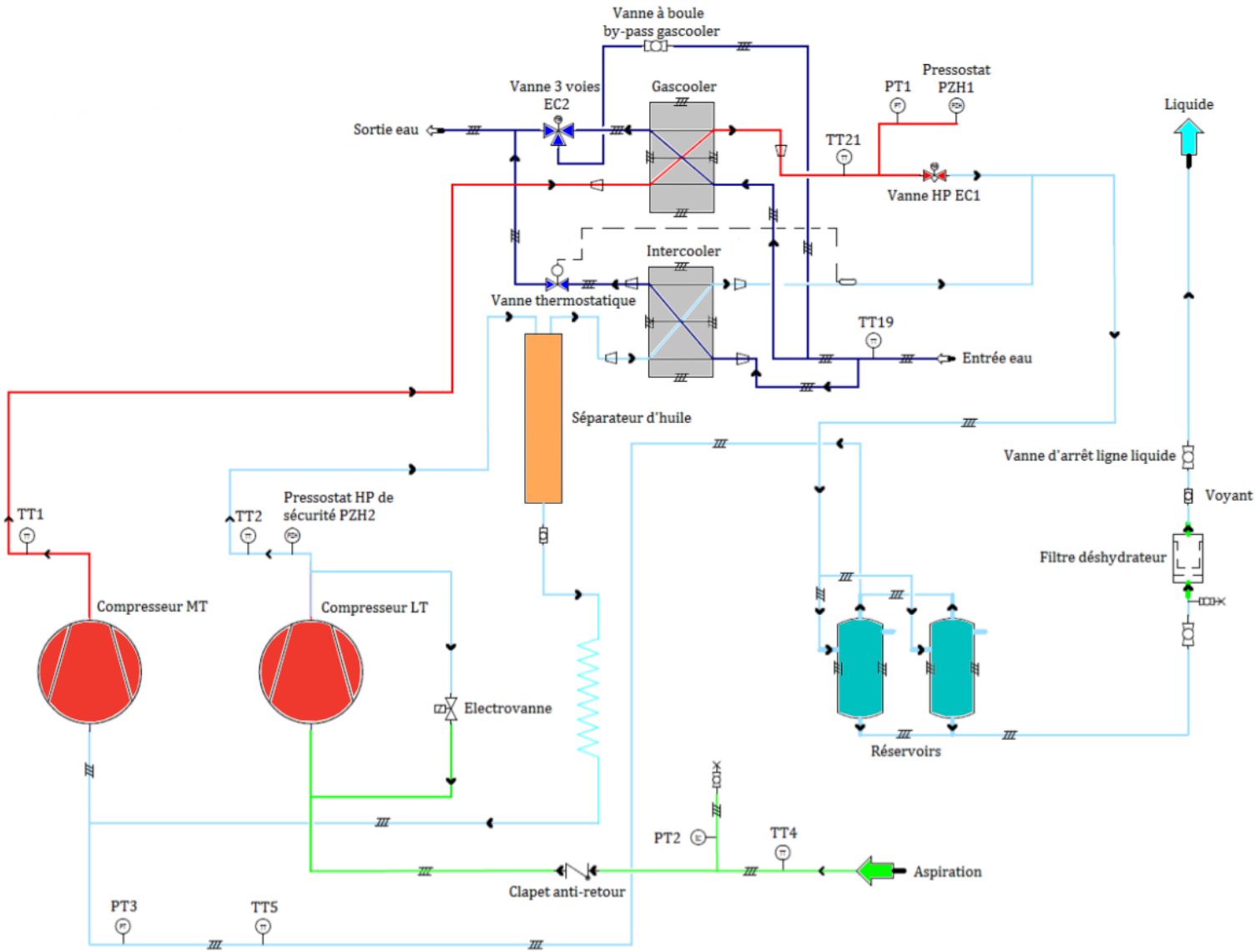

Carrier LT75 (watercooled) - basic unit -

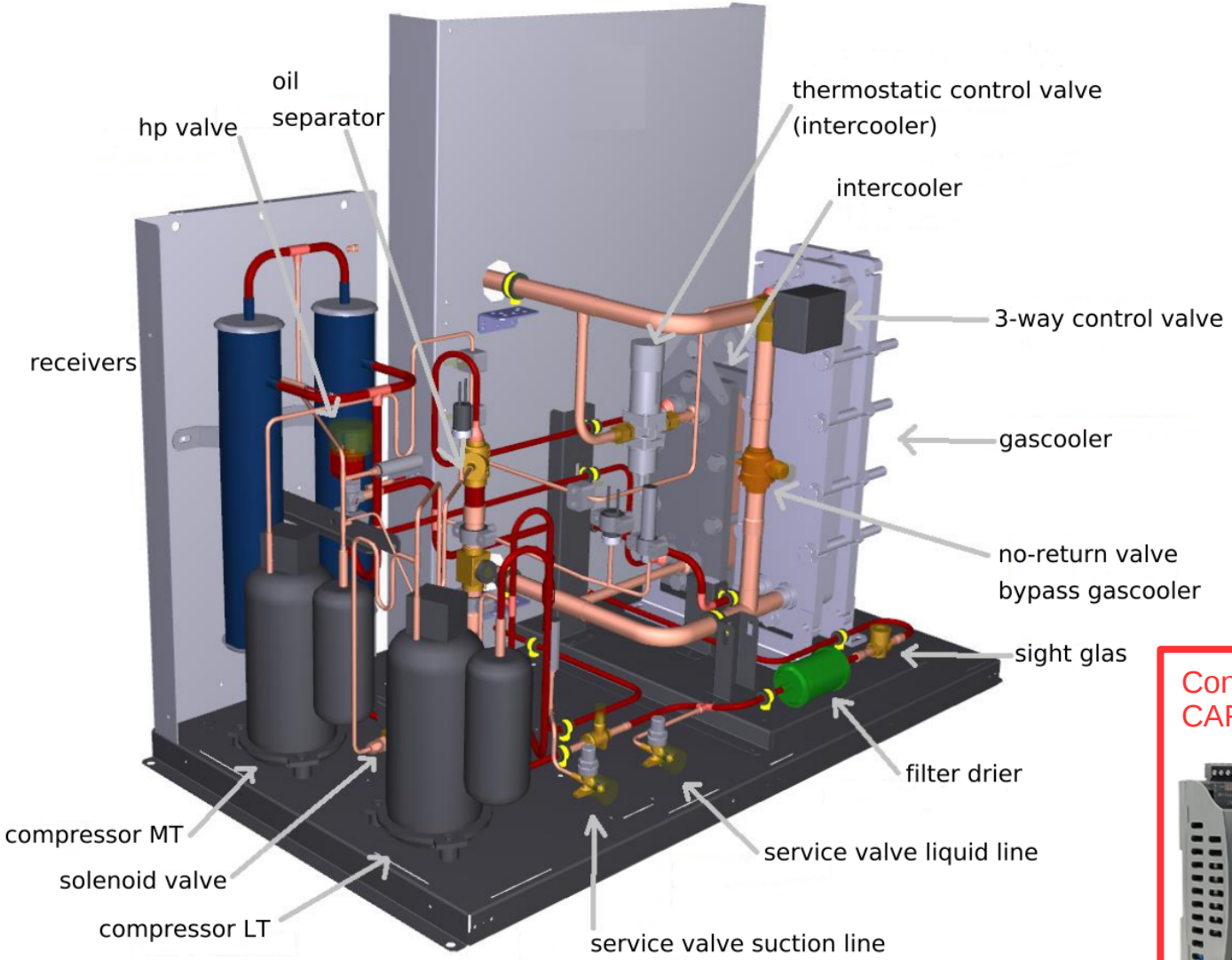

Controlled by
CAREL HeCU:

Carrier LT75 (watercooled) - customized for subcooling -

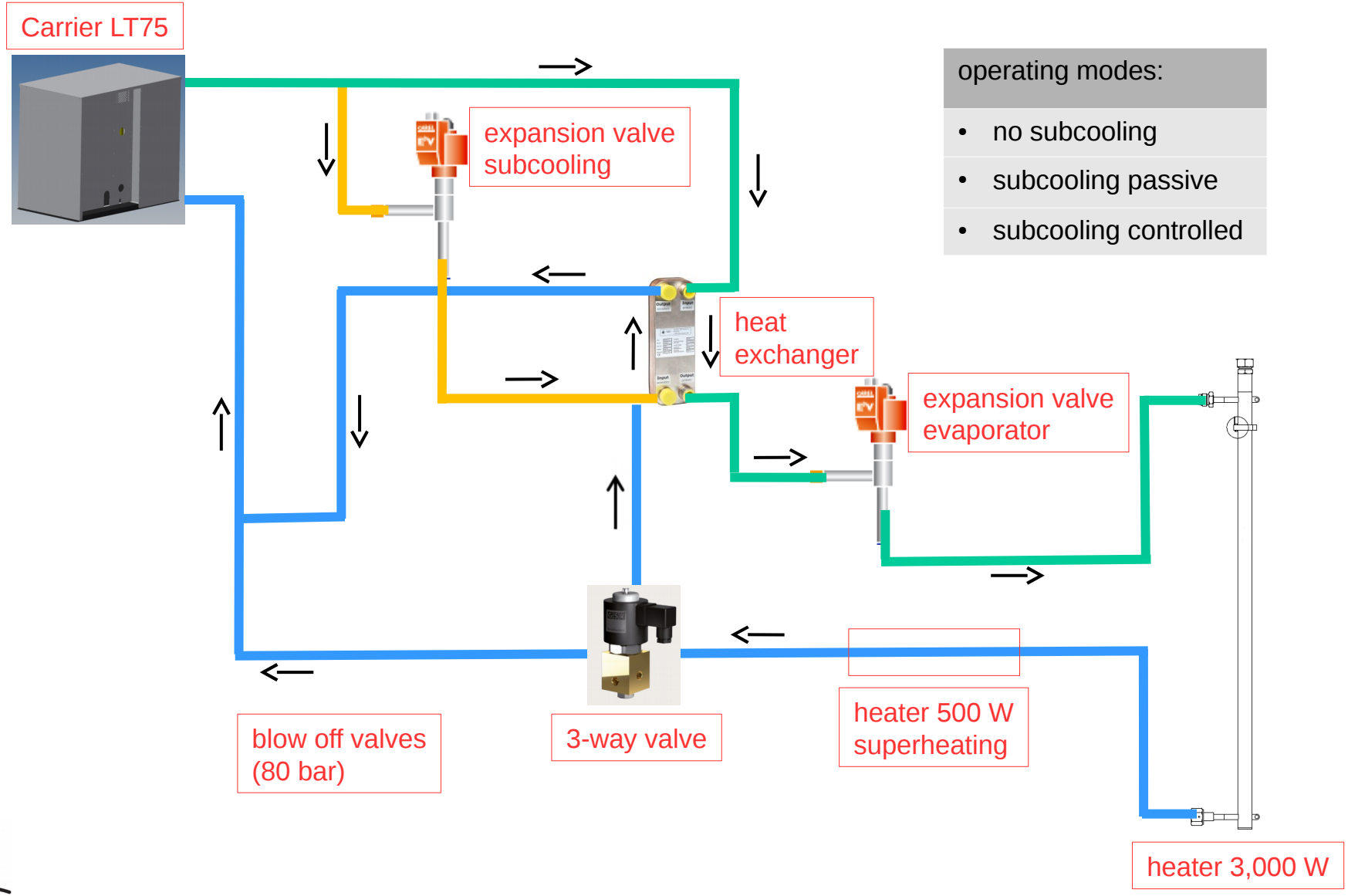

operating modes:

- no subcooling
- subcooling passive
- subcooling controlled

Carrier LT75 (customized) - sensors, valves, control units -

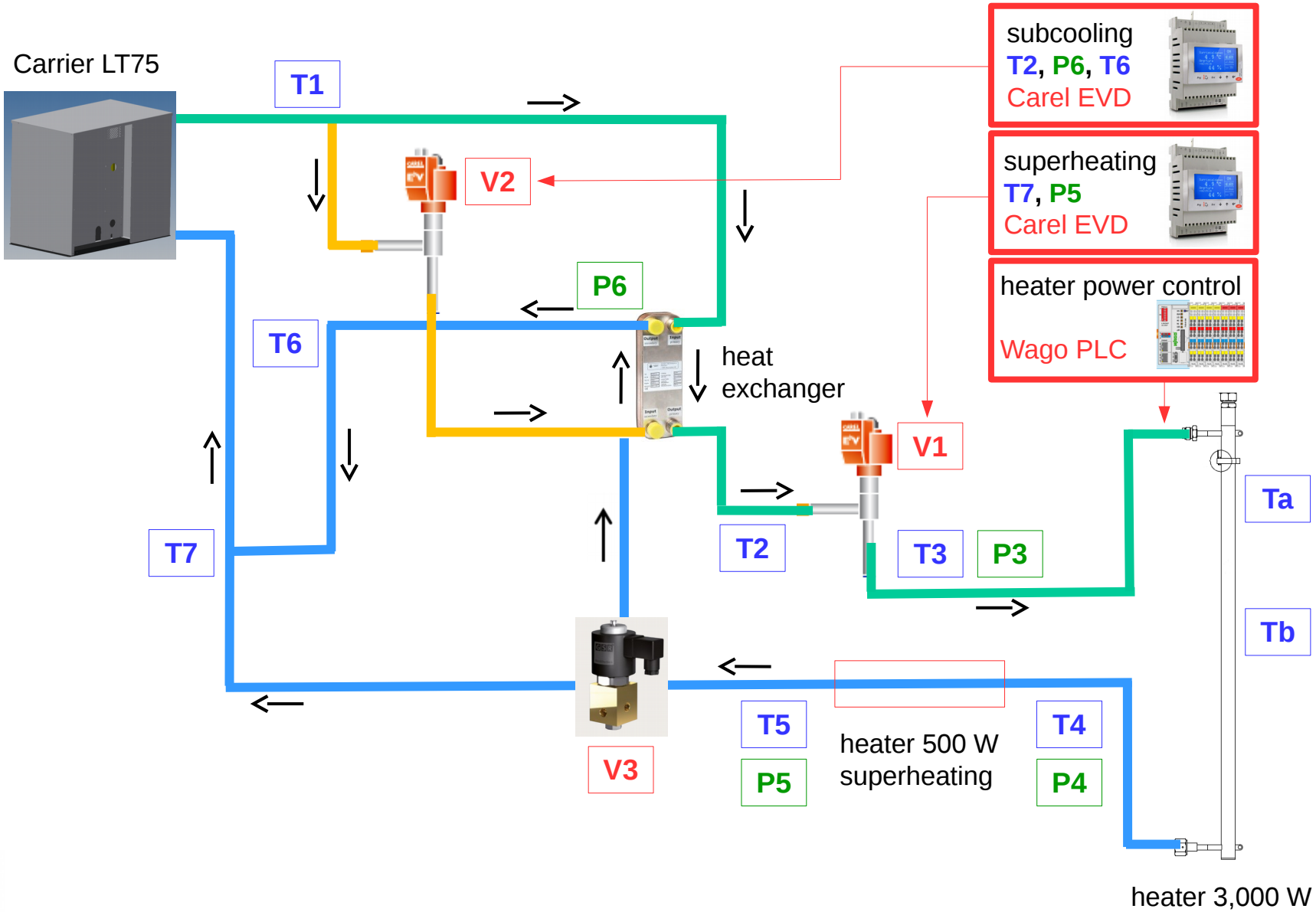

Carrier LT75 (customized) - control devices network -

I/O logger
Carel

chiller control unit
Carel HeCU

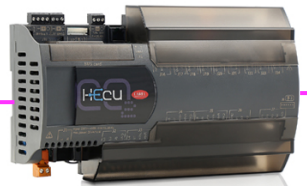

inverter
MT compressor

inverter
LT compressor

MODBUS

subcooling
Carel EVD

T2, P6, T6

superheating
Carel EVD

T7, P5

I/O moduls
Carel

T1, T5, P3, T3, P4, T4

heater power control
wago

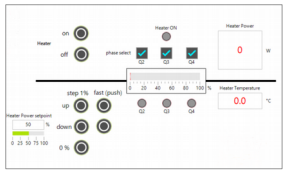

T2, T5, T6, T7
Ta, Tb
attached sensors

Test setup: - side view -

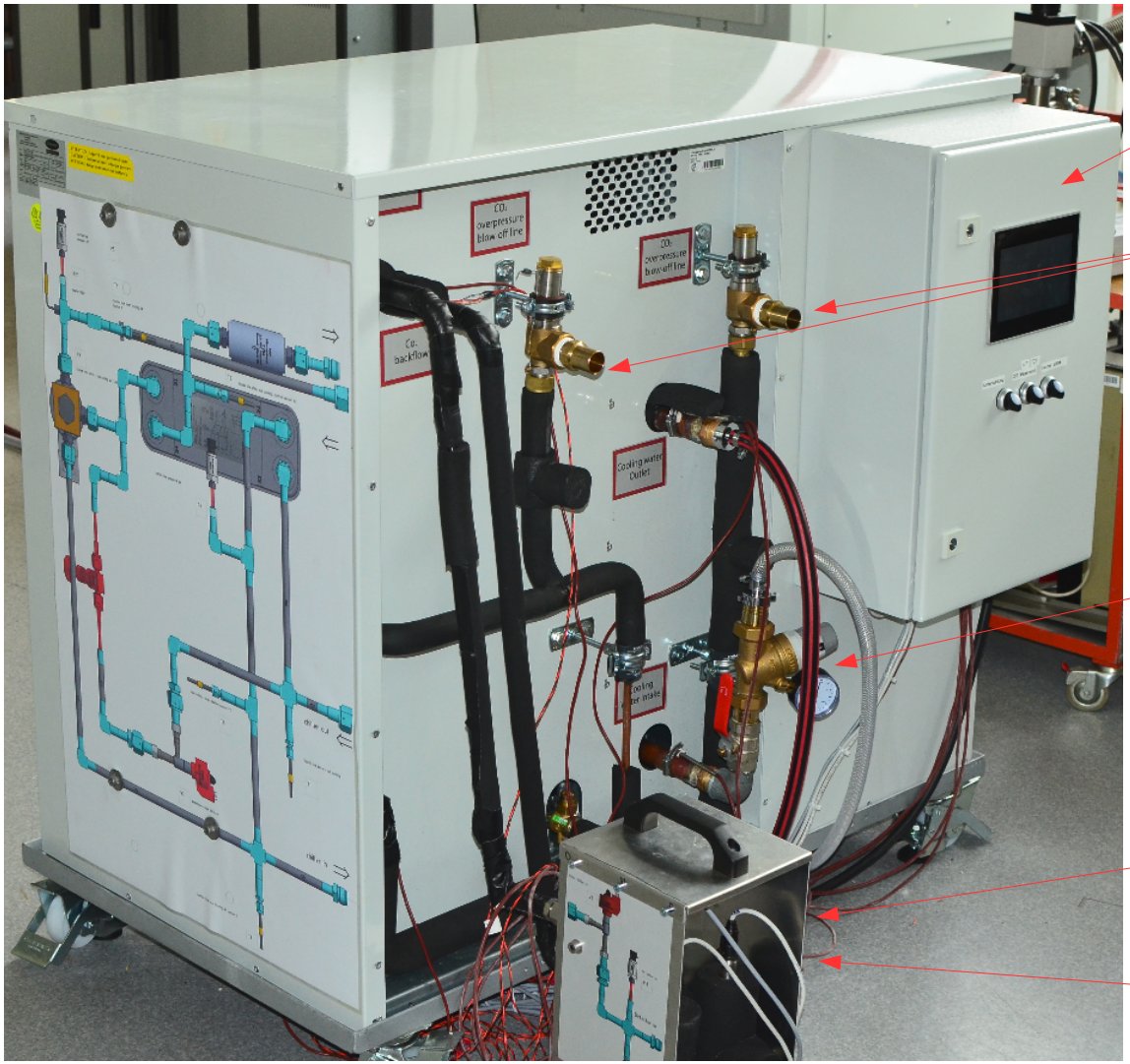

Test setup: - side view - covers removed

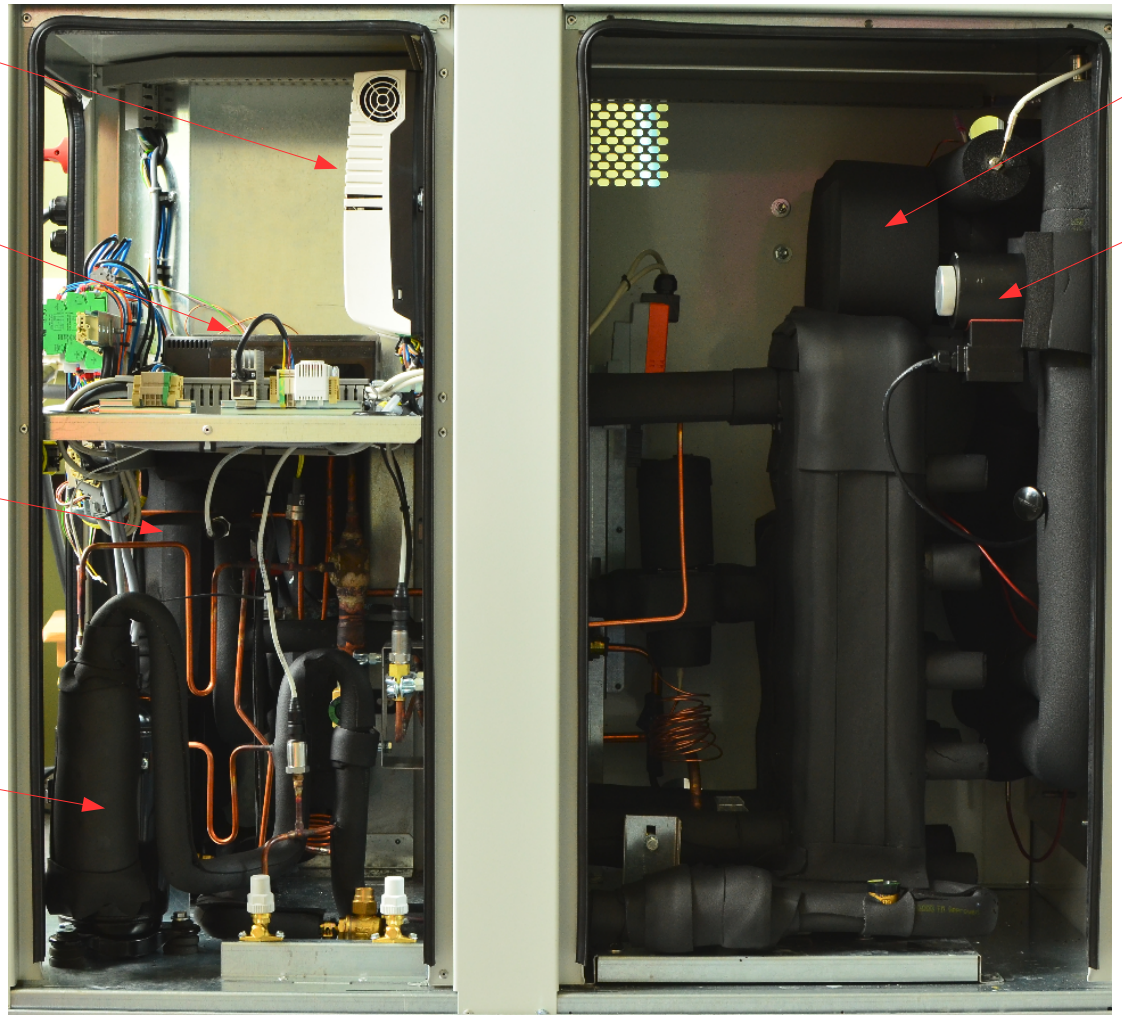

Test setup: - inside control cabinet -

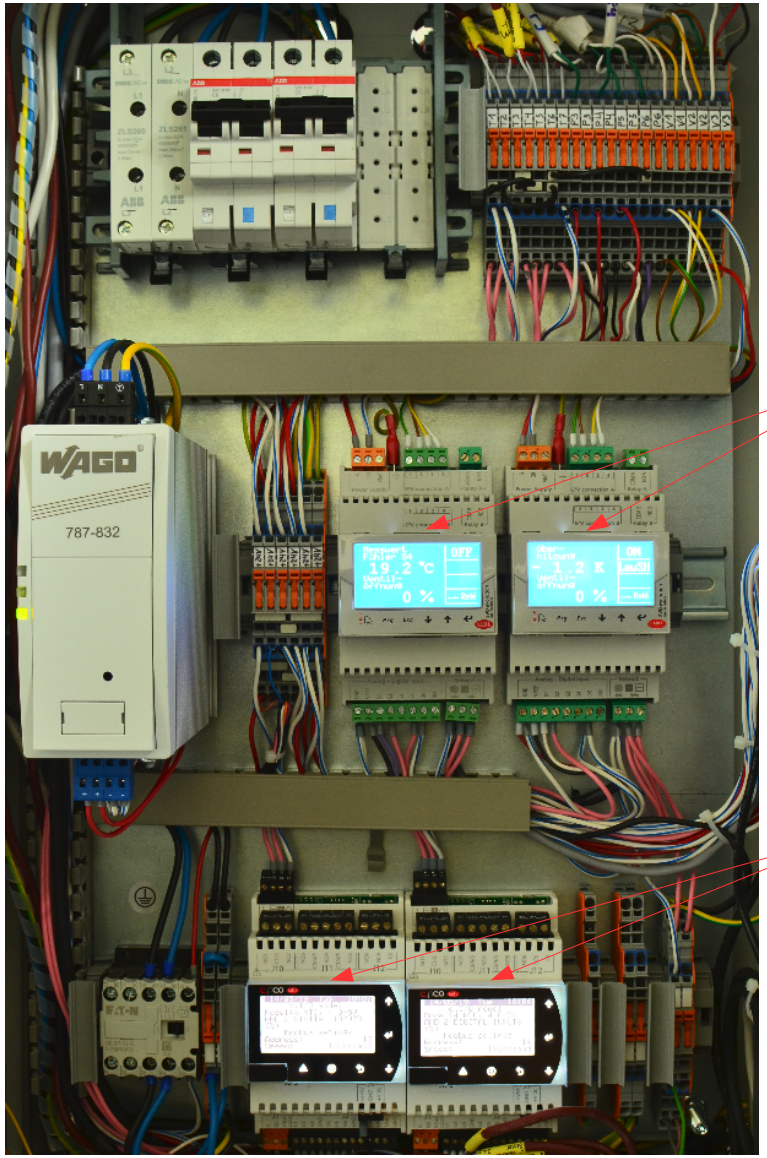

Carel EVD evolution

Carel I/O modul

Test setup: - heater control unit -

wago PLC

touch panel

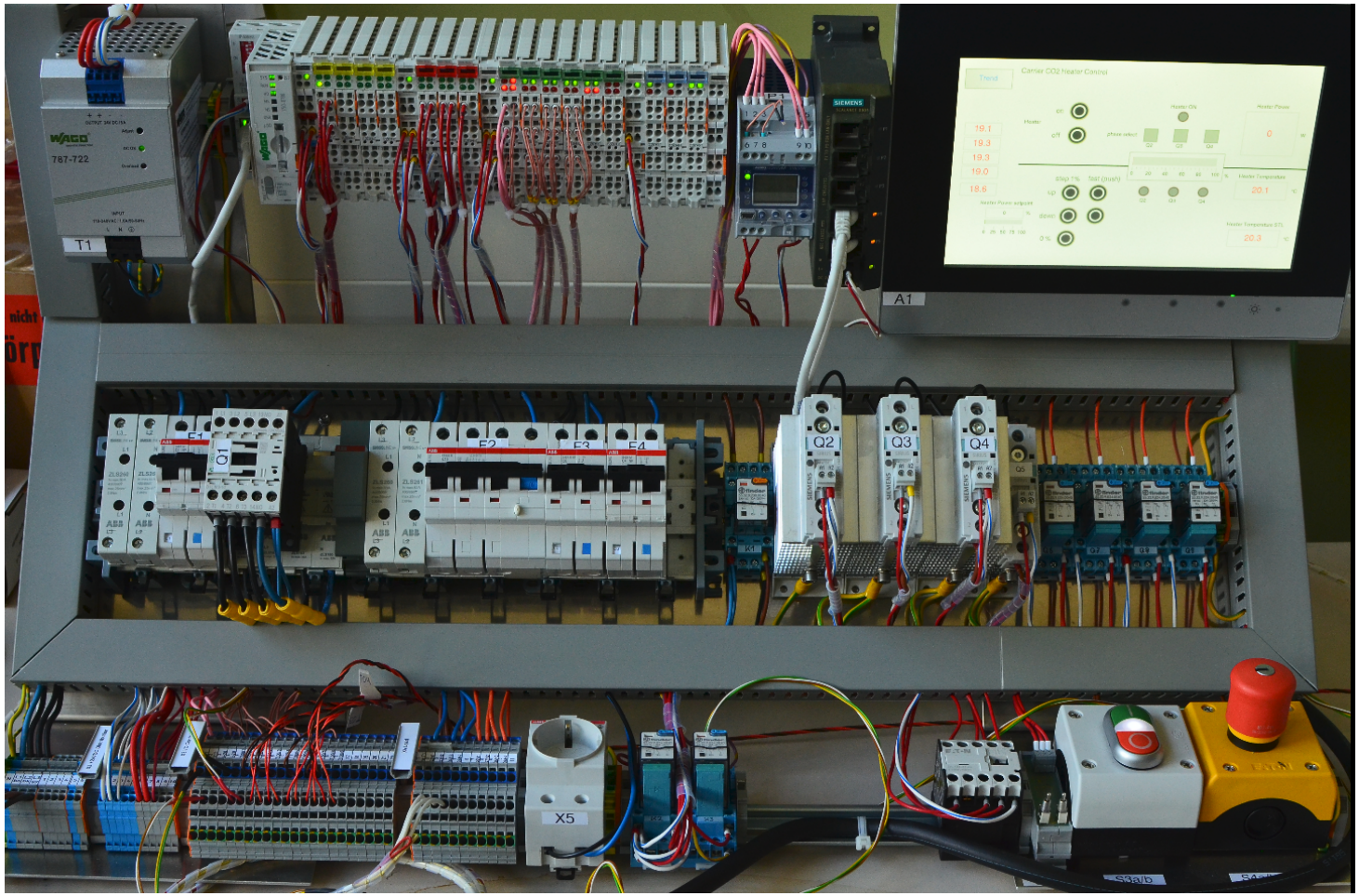

Test setup: - dummy load: 3 kW heater -

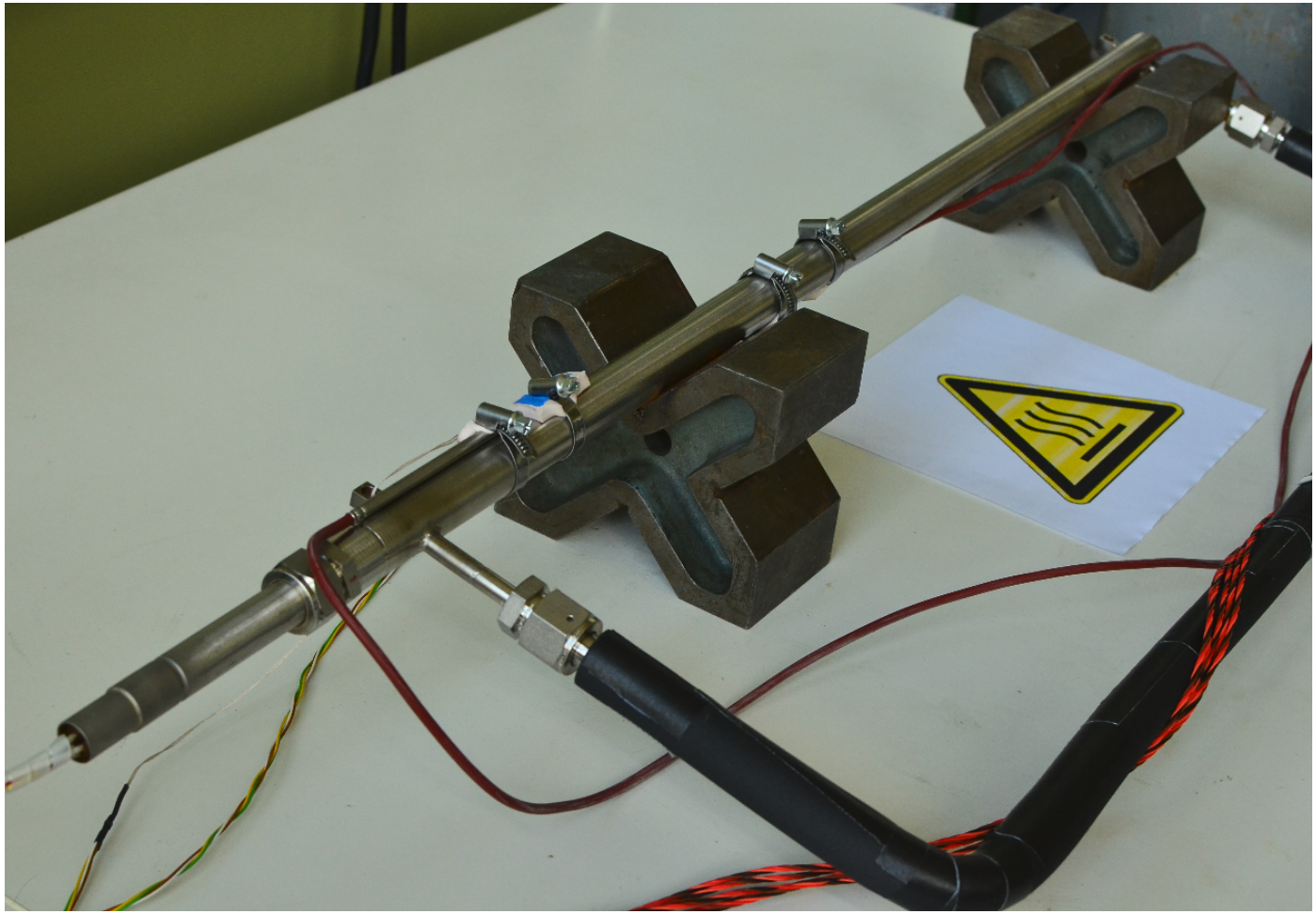

→ out

← in

1. short-term tests on operating modes

operating mode	load	SH set point	events, observations	comment
no subcooling	1,500 W	11 K	oszillations oil recovery: speed boost	no stable operation with basic settings
subcooling **passive**	1,500 W	11 K	minor oszillations	
subcooling **controlled**	1,500 W	11 K	oszillations	no stable operation with basic settings

Carrier LT75 (watercooled) - subcooling passive -

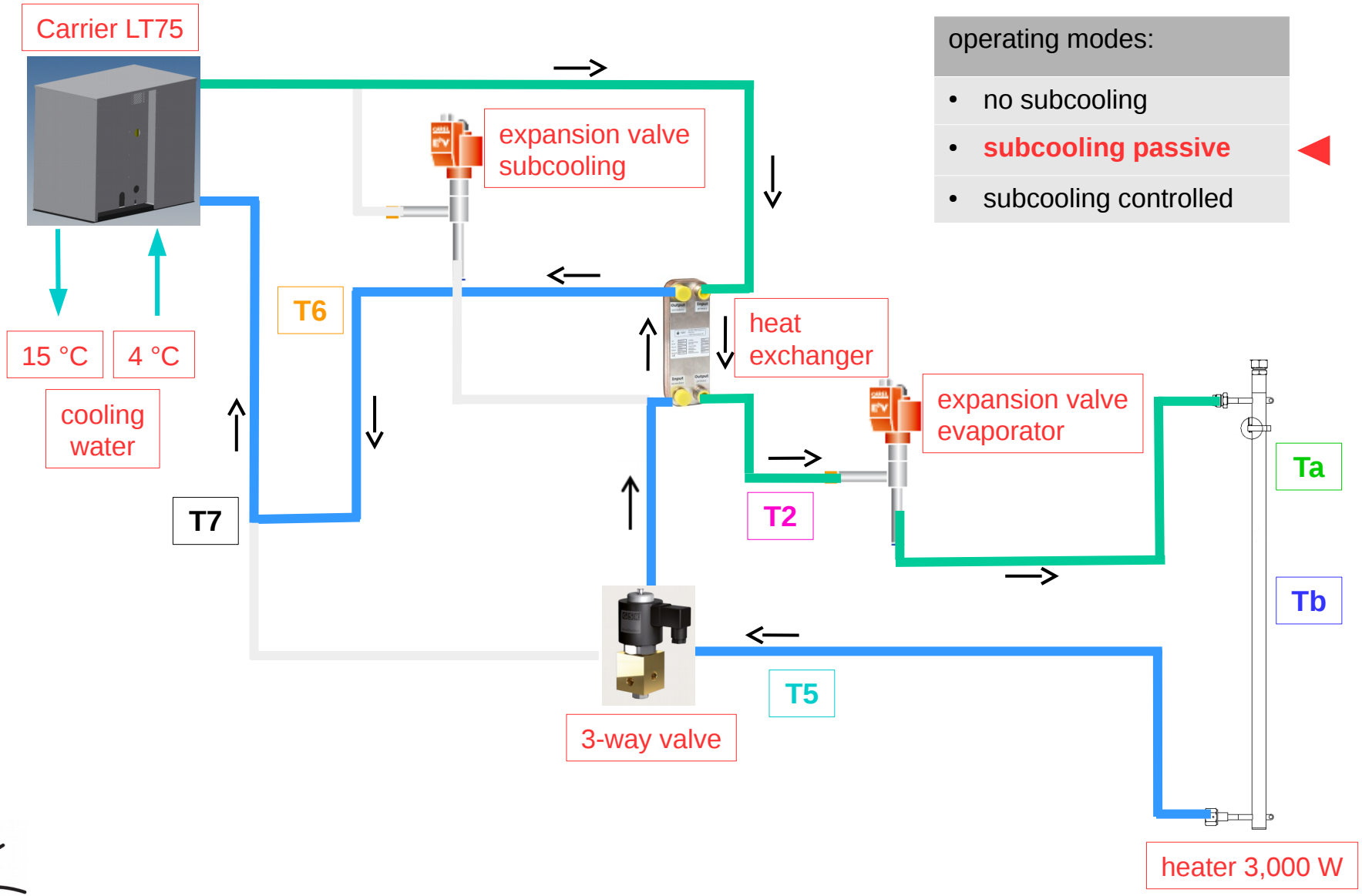

operating modes:

- no subcooling
- **subcooling passive**
- subcooling controlled

2. test subcooling passive: - temperature trends -

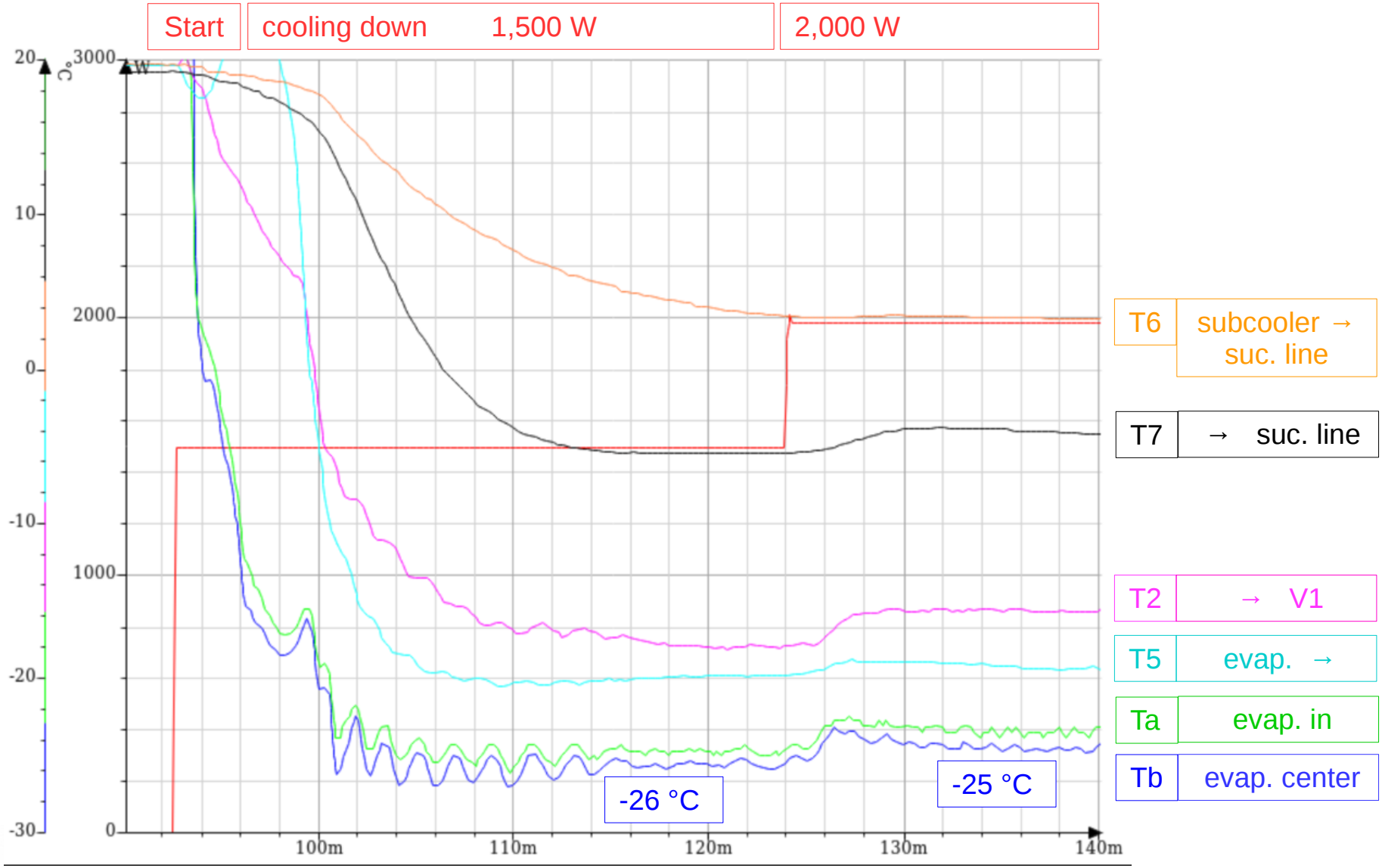

2. test subcooling passive: - temperature trends -

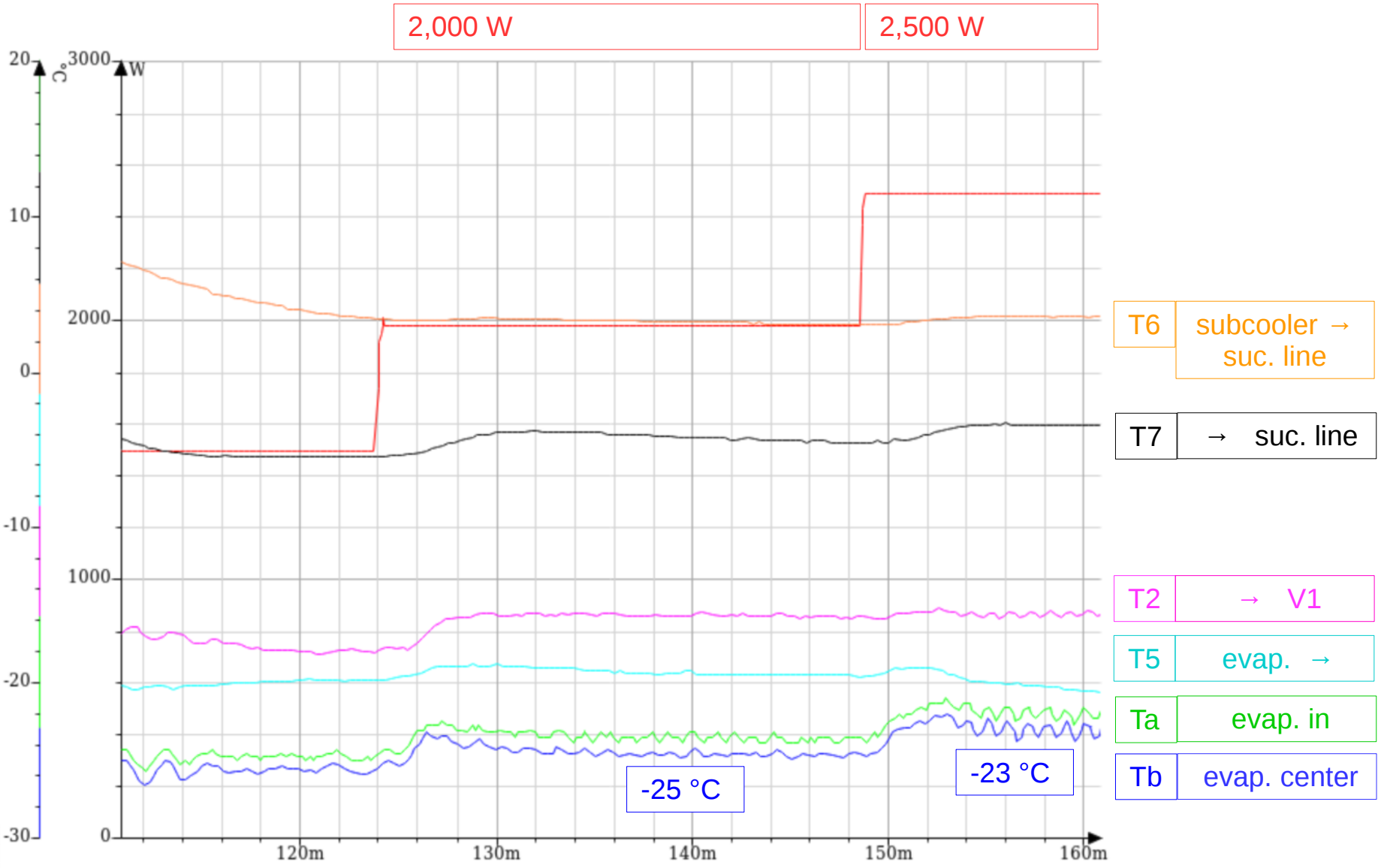

2. test subcooling passive: - temperature trends -

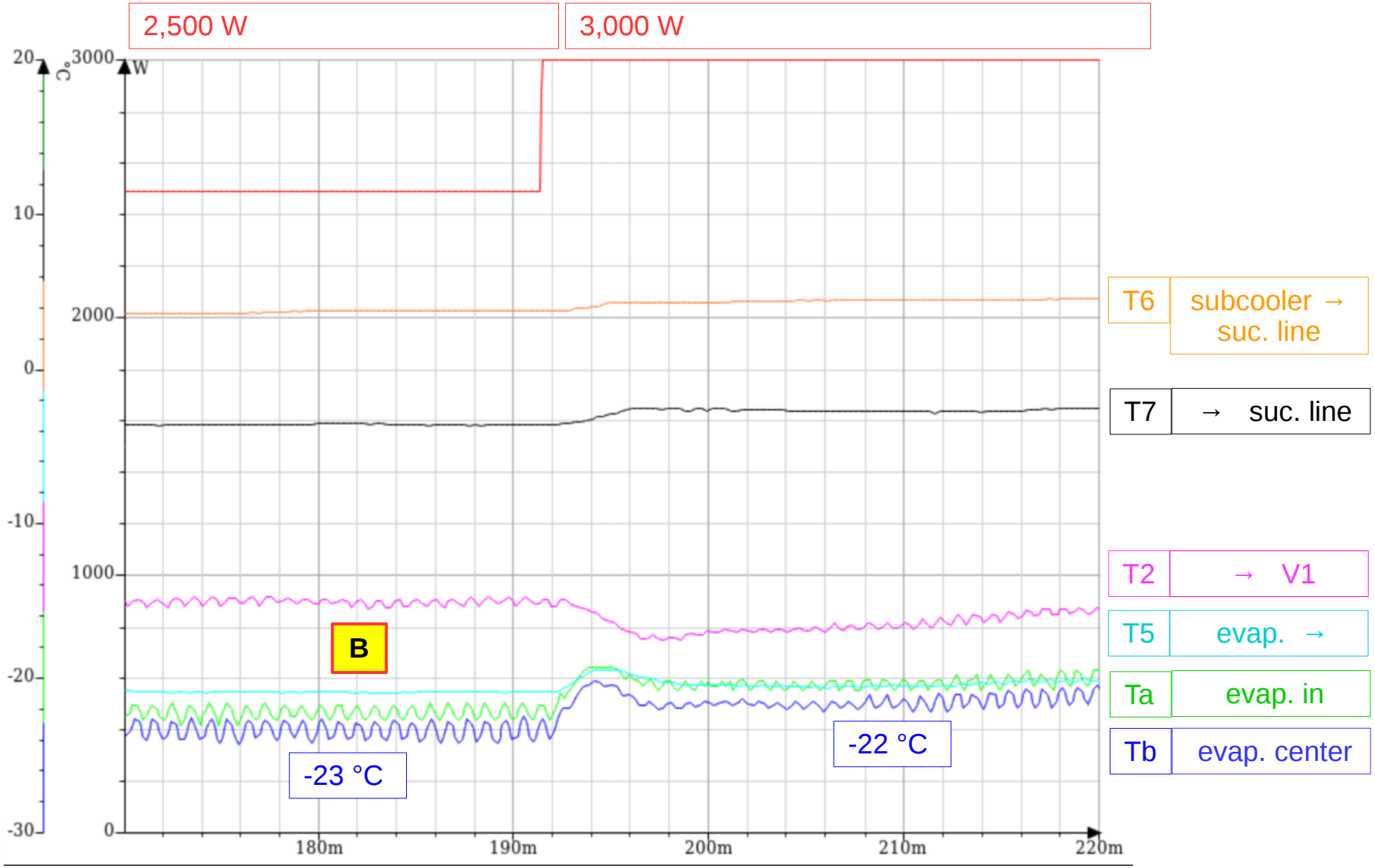

2. test subcooling passive: - temperature trends -

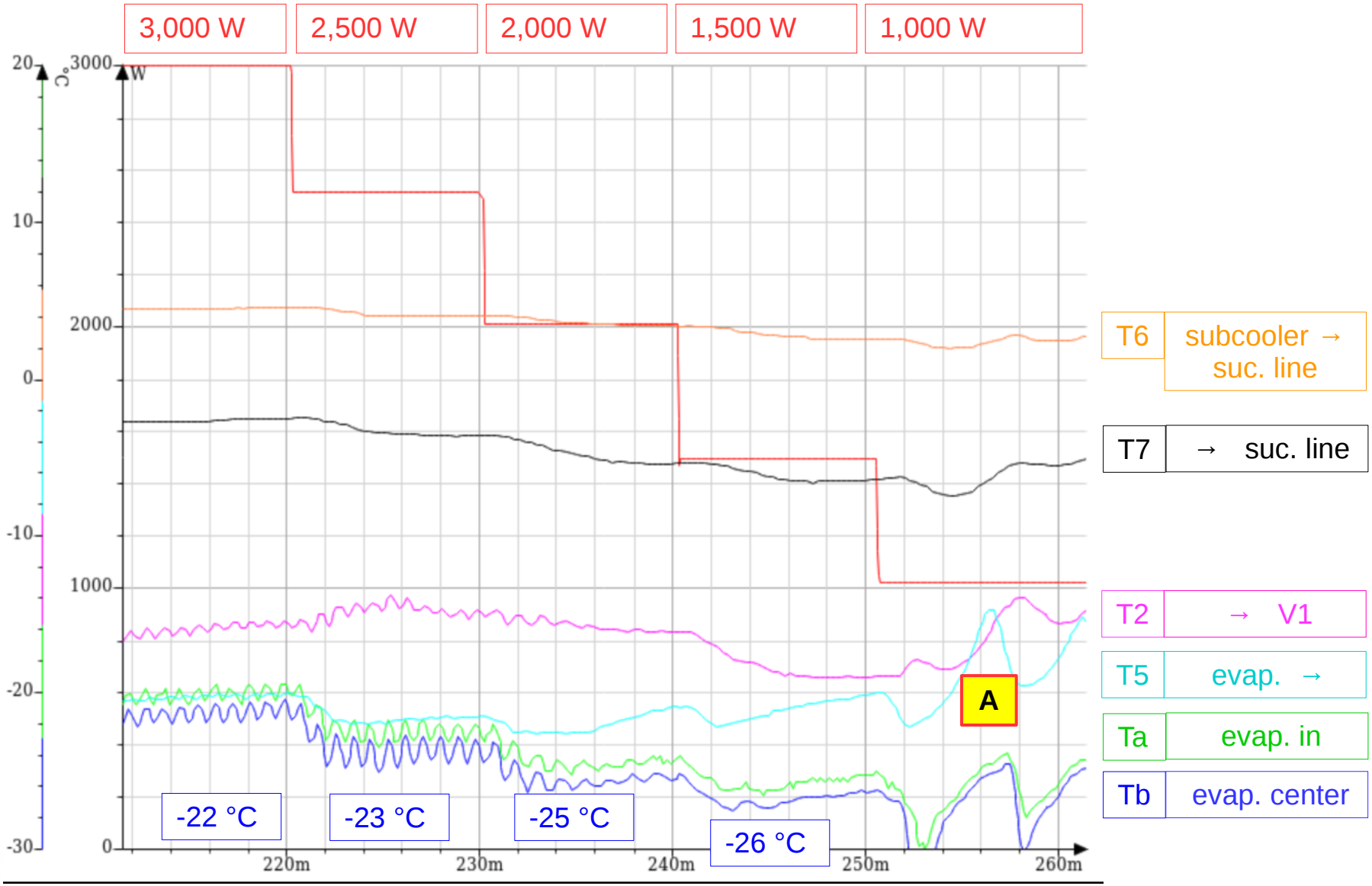

2. tests operating mode: - subcooling passive - summary

load	SH set point	comp. load	exp. valve V1	evap. temp. Tb	events, observations	comment
1,000 W	8 K	33 %	40 %	un-steady	oszillations compressors: On/Off oil recovery: speed boost **A**	no stable operation with basic settings
1,500 W	8 K	48 %	50 %	-26 °C	minor oszillations	stable operation
2,000 W	8 K	65 %	63 %	-25 °C		stable operation range of rated operation
2,500 W	8 K	85 %	70 %	-23 °C	minor oszillations control modes have to be improved **B**	stable operation
3,000 W	8 K	98 %	79 %	-22 °C	minor oszillations	stable operation

- next steps -

- improve **data acquisition** and measurement
- analyze other **operation modes**
- improve **control modes** to reduce oszillations
- understand **oil** management and allocation
- insert **capillary** detector cooling element
- test **long term** load performance
- prepare **first use**

Video: - chiller in operation -

Footage: 1 min 20 sec