# PXD9-20: results from probe station measurements

Daniel Klose, Jelena Ninkovic, Rainer Richter

# Outline & Motivation

1. Short introduction to the device testing

2. Results
   - Global tests on the modules to get info on:
     1. Diode integrity (n+ & p+ region)
     2. Shorts in the polylines (Gate & ClearGate)
   - Tests of DEPFET transfer characteristics at one gate row to get info on:
     1. Opens (Drainlines)
     2. Shorts (Drainlines)
     3. Pedestal Currents and other Transistor characteristics

→ precise localisation of faulty drainlines
→ possibility of rework in faulty areas

# Metallization

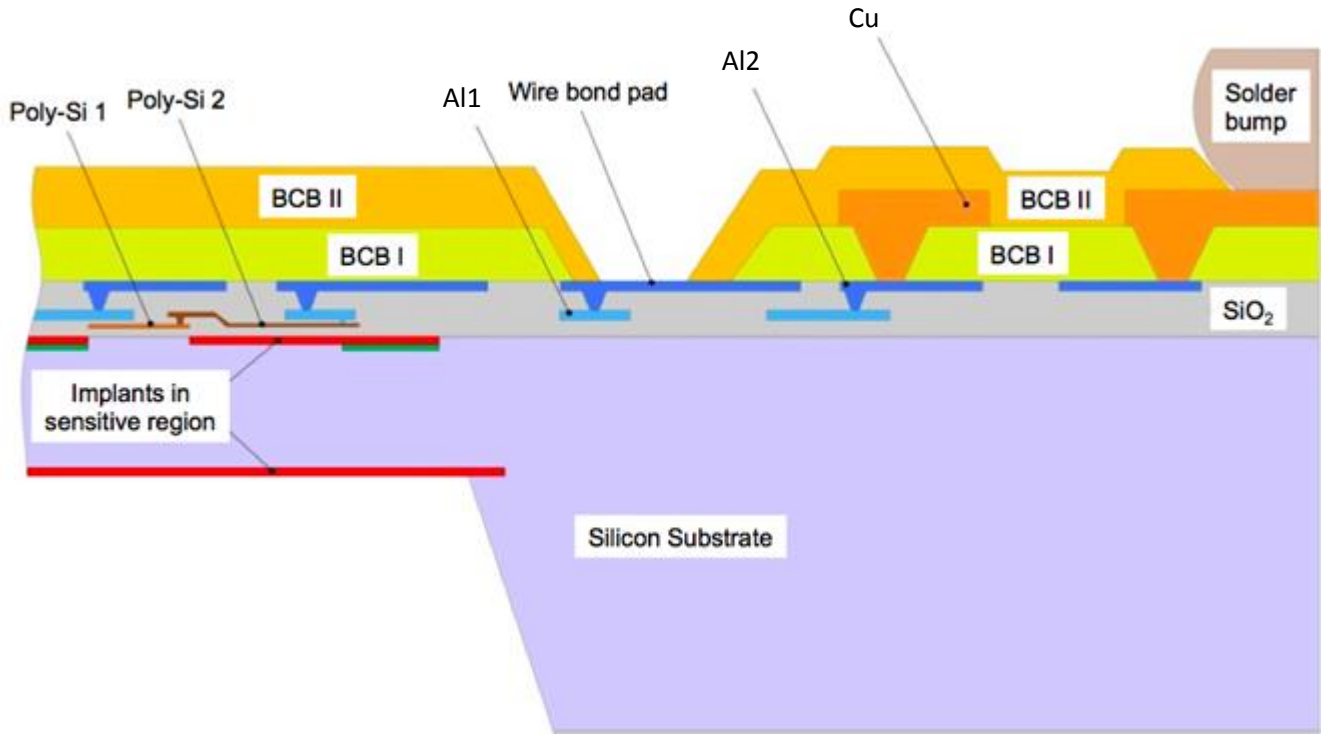


- Metallization done layer by layer with alternating of dielectric and routing material (Al1, Al2 and Cu)
- $SiO_2$ & BCB (BenzoCycloButene) as dielectrics between the layers
- Connection between the layers done per vias

# Defects

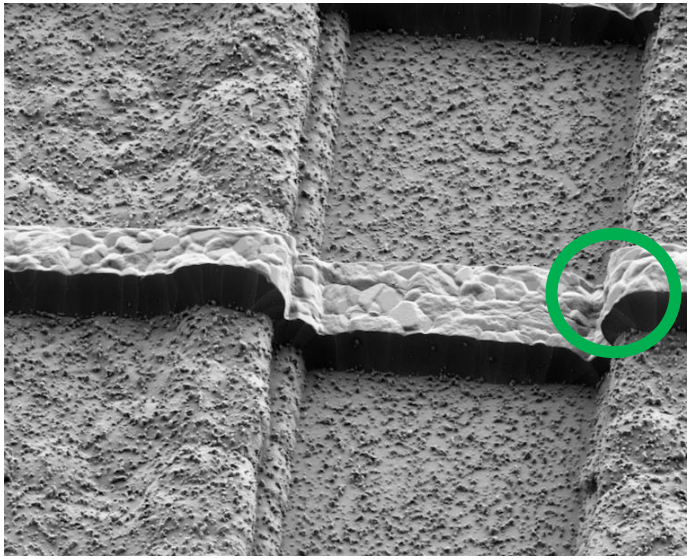

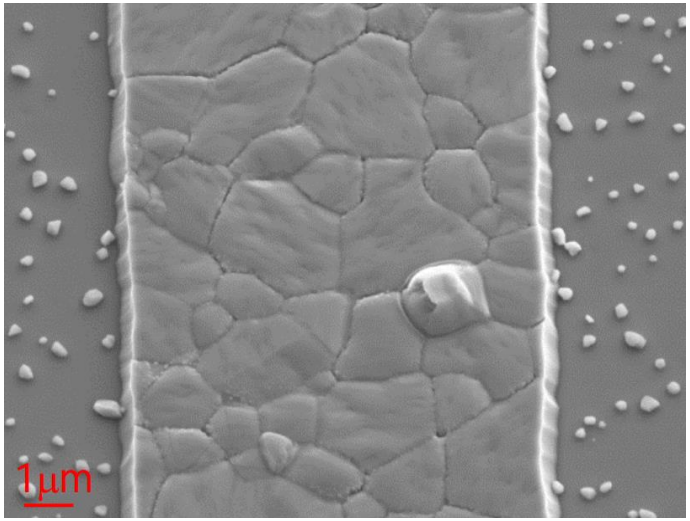


- Lateral shorts (Stringers)
- Discontinuities (Topographie)

- Hillocks
- Etching of contacts might lead to missing contacts
- Breakdown of the dielectric

# Outline & Motivation

1. Short introduction to the device testing

2. Results
   - Global tests on the modules to get info on:
     1. Diode integrity (n+ & p+ region)
     2. Shorts in the polylines (Gate & ClearGate)
   - Tests of DEPFET transfer characteristics at one gate row to get info on:
     1. Opens (Drainlines)
     2. Shorts (Drainlines)
     3. Pedestal Currents and other Transistor characteristics

→ precise localisation of faulty drainlines
→ possibility of rework in faulty areas

# AllClear (n+) vs Source (p+)

Test of all p-regions vs n-regions => Test of the Diode Integrity
Criteria: breakdown starts around $V_{Clear} \approx 15$ V

| | W50 | W51 | W52 | W53 | W54 | W55 | W56 | W57 | W58 | W59 | W60 | W61 |
|---|---|---|---|---|---|---|---|---|---|---|---|---|
| IF | ok | bad | ok | ok | ok | ok | ok | ok | ok | ok | bad | ok |
| OF1 | ok | ok | ok | ok | ok | ok | ok | ok | bad | ok | ok | ok |
| OF2 | ok | ok | ok | ok | ok | bad | ok | ok | ok | ok | ok | bad |
| OB1 | ok | ok | ok | ok | ok | ok | ok | ok | ok | ok | ok | bad |
| OB2 | bad | ok | ok | ok | ok | ok | ok | ok | bad | ok | bad | bad |
| IB | bad | ok | ok | ok | ok | ok | ok | ok | ok | ok | ok | ok |

Ok marked in yellow have higher currents (~ 1-3 µA, not nA).
If needed, the modules should be tested further.

# PXD9 – Clear vs Source

| | W01 | W02 | W03 | W04 | W05 | W06 | W07 | W08 | W09 | W10 | W11 | W12 | W13 | W30 | W31 |
|---|---|---|---|---|---|---|---|---|---|---|---|---|---|---|---|
| IF | bad | ok | ok | ok | ok | ok | dead | ok | ok | ok | ok | bad | ok | ok | ok |
| OF1 | ok | ok | bad | ok | ok | ok | dead | bad | ok | ok | ok | ok | ok | ok | ok |
| OF2 | bad | bad | ok | bad | ok | ok | dead | ok | ok | ok | ok | med | bad | ok | ok |
| OB1 | ok | bad | ok | med | ok | ok | dead | ok | ok | ok | bad | ok | bad | ok | ok |
| OB2 | bad | bad | bad | bad | bad | bad | dead | ok | med | bad | bad | ok | ok | ok | ok |
| IB | ok | med | ok | med | ok | med | dead | bad | ok | bad | med | bad | ok | ok | ok |

| | W32 | W33 | W35 | W36 | W37 | W38 | W40 | W41 | W42 | W43 | W44 | W45 | W46 | W47 |
|---|---|---|---|---|---|---|---|---|---|---|---|---|---|---|
| IF | ok | bad | ok | ok | ok | bad | ok | ok | ok | ok | ok | med | ok | ok |
| OF1 | ok | ok | ok | ok | ok | bad | ok | ok | bad | ok | ok | ok | ok | ok |
| OF2 | ok | ok | med | ok | bad | bad | med | bad | med | bad | ok | ok | ok | bad |
| OB1 | bad | ok | ok | bad | ok | ok | med | bad | ok | bad | ok | bad | ok | bad |
| OB2 | ok | bad | bad | ok | ok | bad | ok | bad | ok | med | ok | ok | ok | bad |
| IB | ok | bad | med | ok | ok | ok | ok | ok | ok | ok | ok | ok | ok | ok |

- Test of all p-regions vs n-regions => Test of the Diode Integrity

- In case of just one short => module is considered bad
- Shorts are not specified => further tests would be required

| | | | |
|---|---|---|---|
| IF | 23 | 1 | 5 |
| OF1 | 24 | 0 | 5 |
| OF2 | 15 | 4 | 10 |
| OB1 | 17 | 2 | 10 |
| OB2 | 13 | 2 | 14 |
| IB | 19 | 5 | 5 |

# Pixelstructure

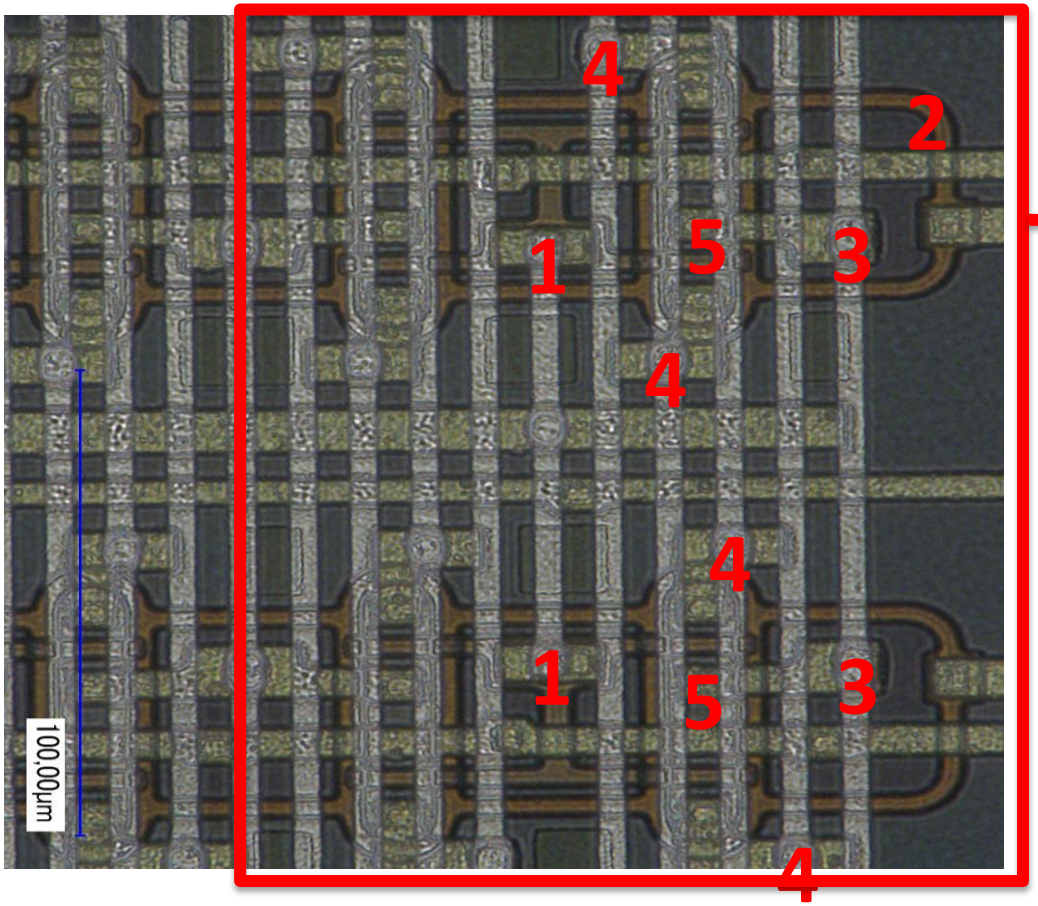


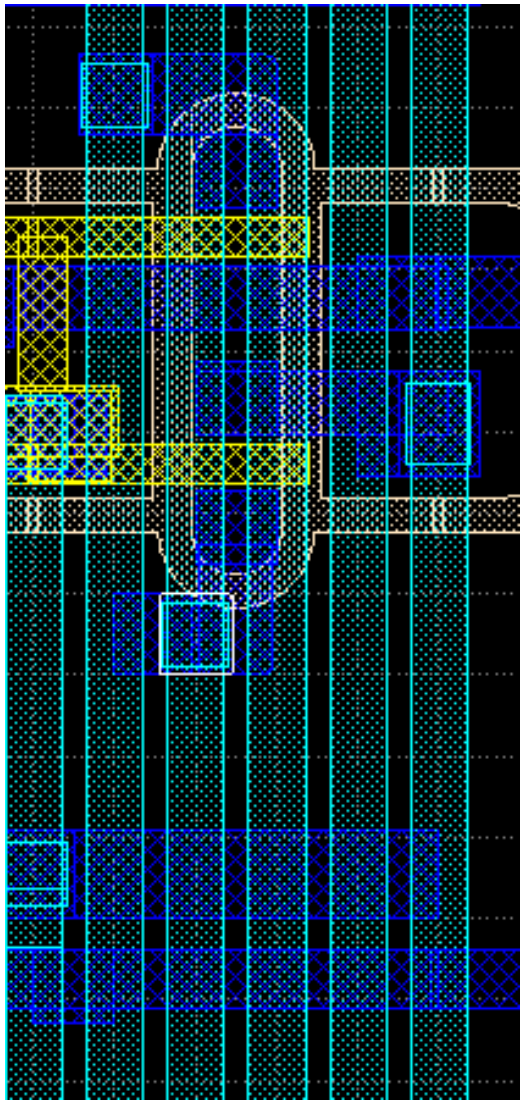

*Top view of 12 DEPFET pixels.*
*1: external gate (poly-Si2), 2: clear gate (poly-Si1), 3: clear (n+), 4: drain (p+), 5: source (p+).*

# The poly1/poly2 electrical net

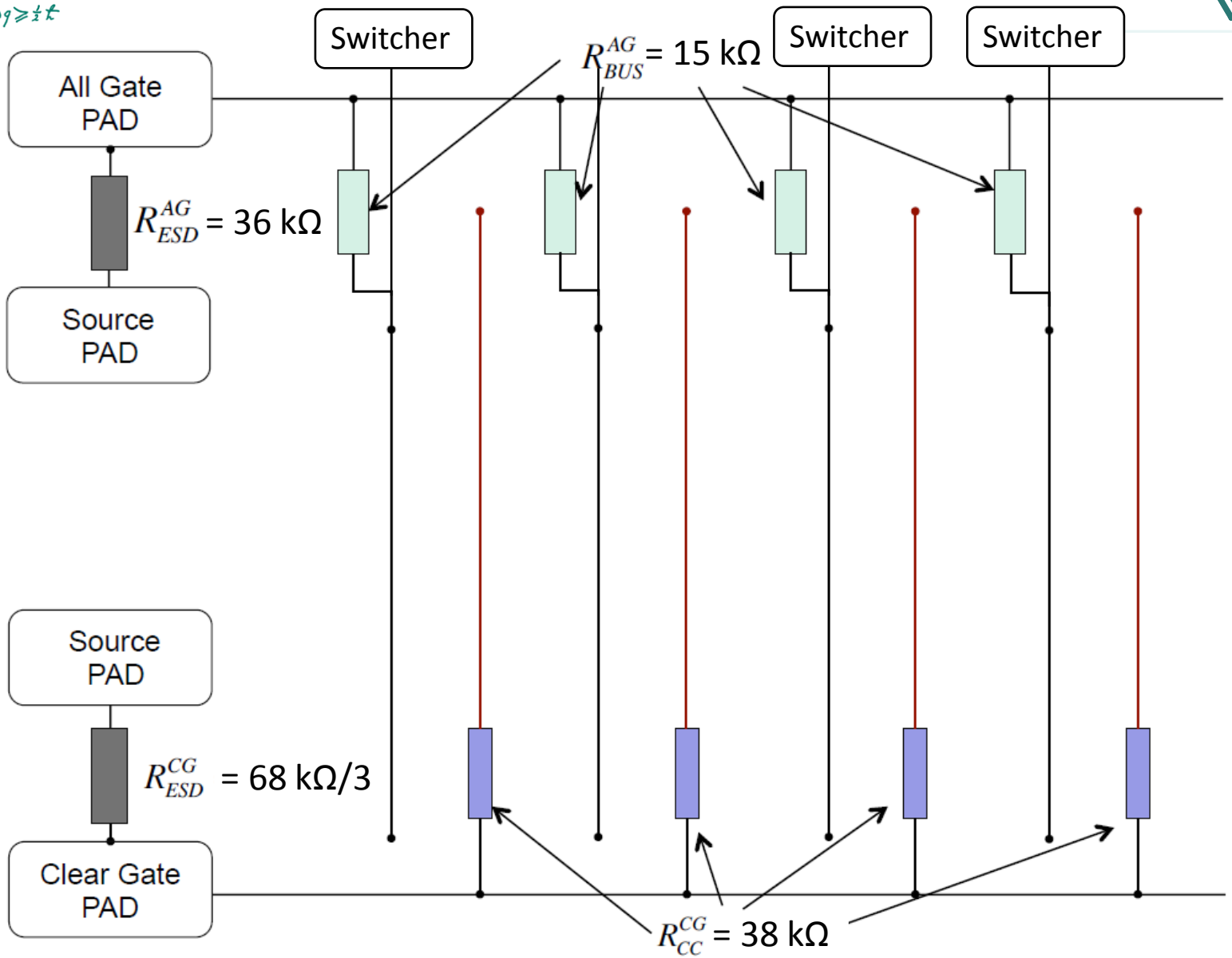


Picture by P. Avella

# The poly1/poly2 electrical net

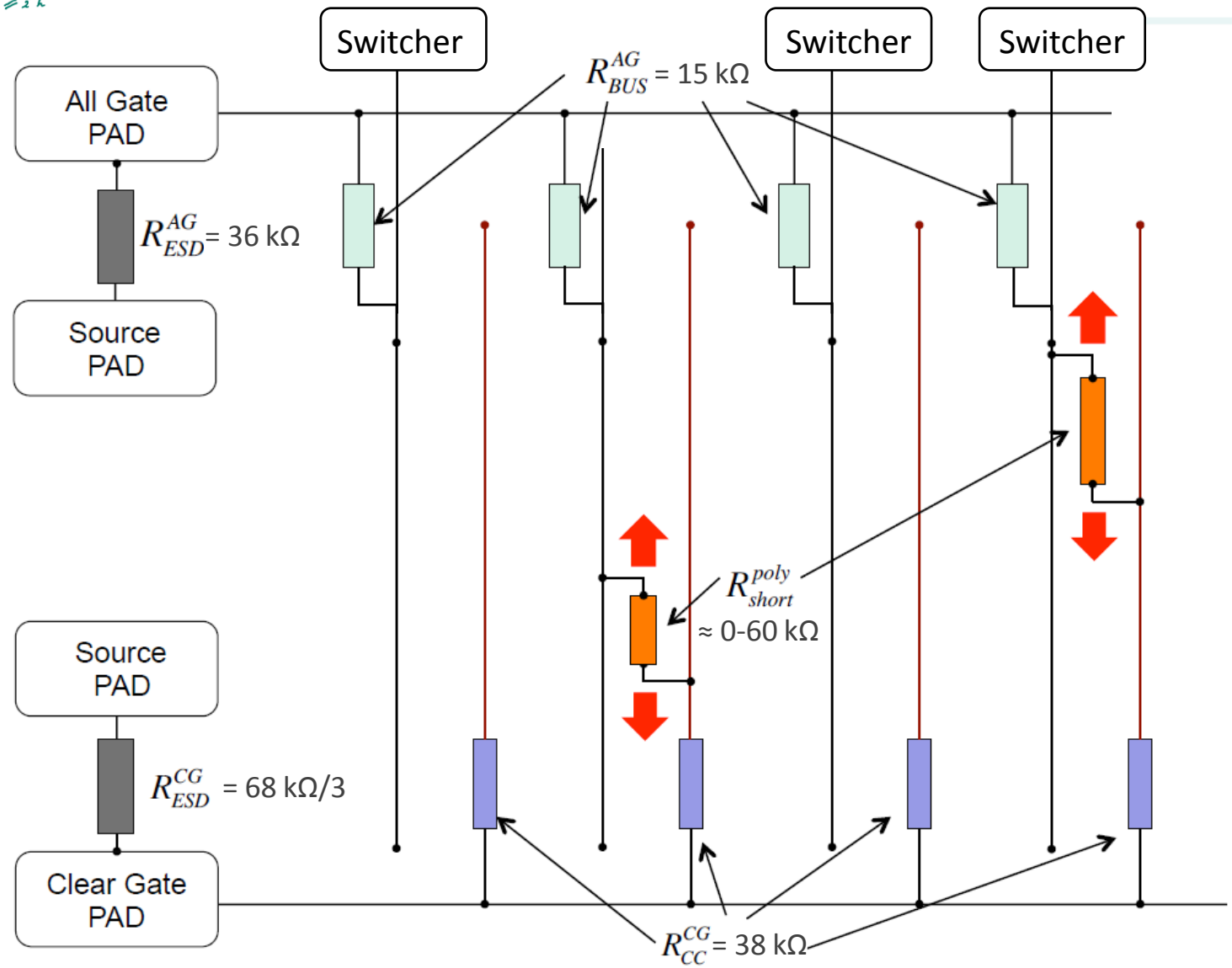


Picture by P. Avella

# AllClearGate vs All Gate

But Clear vs Source short anyway

| | W50 | W51 | W52 | W53 | W54 | W55 | W56 | W57 | W58 | W59 | W60 | W61 |
|---|---|---|---|---|---|---|---|---|---|---|---|---|
| IF | 61,9 | 67,8 | 60,3 | 58,5 | 58,6 | 59,3 | 59 | 59,8 | 58,6 | 58,5 | bad | 59,4 |
| OF1 | 49,6 | 70,4 | 62,1 | 59,7 | 59,6 | 60,9 | 60,3 | 60,8 | 58 | 59,8 | 60,3 | 52,2 |
| OF2 | 64,6 | 72,5 | 63,7 | 61,1 | 44,4 | 62 | 61,7 | 62,5 | 61,6 | 61,4 | 61,8 | 29 |
| OB1 | 61,2 | 68,7 | 45,2 | 58,4 | 58,8 | 59,4 | 59,1 | 59,9 | 39,9 | 58,8 | 59,3 | 36 |
| OB2 | 31 | 68,5 | 61,2 | 59 | 38,6 | 59,9 | 41,6 | 43,4 | 59,8 | 59,3 | 59,6 | 47 |
| IB | 35 | 67,1 | 60,7 | 44,3 | 58,3 | 59,5 | 58,5 | 59,5 | 48,6 | 58,5 | 59 | 40,4 |

| |
|---|
| ok |
| 1 short |
| 1-2 shorts |

# PXD9 – Shorts between Poly1 and Poly2

| | W01 | W02 | W03 | W04 | W05 | W06 | W07 | W08 | W09 | W10 | W11 | W12 | W13 | W30 | W31 |
|---|---|---|---|---|---|---|---|---|---|---|---|---|---|---|---|
| IF | 3+ | 1-2 | 2 | 2 | 1 | 1 | bad | 1 | 1 | 1-2 | 1 | 0 | 1 | 2-3 | 1-2 |
| OF1 | 0 | 1-2 | 1 | 1 | 1 | 2 | bad | 1-2 | 2 | 2+ | 2 | 2 | 3 | 0-1 | 1-3 |
| OF2 | 2+ | 2 | 0 | 2+ | 1 | 3+ | bad | 1 | 1 | 2+ | 2 | 2 | 2+ | 1 | 1-2 |
| OB1 | 0 | 2 | 1 | 1-2 | 2 | 2 | 0* | 2 | 1-2 | 2+ | 3+** | 1 | 2+ | 2+ | 1 |
| OB2 | 1 | 2 | 1 | 1 | 2 | 2 | bad | 1-2 | 1 | 2+ | 2 | 2 | 2+ | 1 | 1 |
| IB | 0 | 2 | 0 | 1 | 2+ | 1 | bad | 1 | 0 | 1-2 | 2 | 1 | 1-2 | 2+ | 0 |

*Increased resistance in the AllClearGate_vs_Source and AllGate_vs_AllClearGate tests
**very low resistance in AllGate vs Source test

| | W32 | W33 | W35 | W36 | W37 | W38 | W40 | W41 | W42 | W43 | W44 | W45 | W46 | W47 |
|---|---|---|---|---|---|---|---|---|---|---|---|---|---|---|
| IF | 0 | 2+ | 2-3 | 1-2 | 2+ | 1-2 | 0 | 1 | 1 | 0 | 1-2 | 1 | 1 | 1 |
| OF1 | 1 | 0 | 2-3 | 1-2 | 2+ | 2+ | 1 | 1 | 0 | 0 | 0 | 1 | 0 | 2-3 |
| OF2 | 0 | 0 | 1-2 | 1 | 2+ | 2+ | 1 | 1 | 0 | 1 | 0 | 0 | 0 | 2+ |
| OB1 | 1-2 | 1 | 0 | 1-2 | 2+ | 2+ | 0 | 2+ | 1 | 2+ | 1-2 | 1 | 1 | 2+ |
| OB2 | 0 | 1-2 | 2+ | 1-2 | 1 | 2+ | 0 | 2+ | 0 | 0 | 0 | 0 | 0 | 2+ |
| IB | 0 | 2-3 | 0 | 1 | 1-3 | 1-3 | 0 | 0 | 0 | 0 | 0 | 0 | 1 | 1 |

# Summary global tests

| | W50 | W51 | W52 | W53 | W54 | W55 | W56 | W57 | W58 | W59 | W60 | W61 |
|---|---|---|---|---|---|---|---|---|---|---|---|---|
| IF | 0 shorts | 0 shorts | 0 shorts | 0 shorts | 0 shorts | 0 shorts | 0 shorts | 0 shorts | 0 shorts | 0 shorts | bad | 0 shorts |
| OF1 | 0 shorts | 0 shorts | 0 shorts | 0 shorts | 0 shorts | 0 shorts | 0 shorts | 0 shorts | 1 short | 0 shorts | 0 shorts | 0 shorts |
| OF2 | 0 shorts | 0 shorts | 0 shorts | 0 shorts | 1 short | 0 shorts | 0 shorts | 0 shorts | 0 shorts | 0 shorts | 0 shorts | 1-2 short |
| OB1 | 0 shorts | 0 shorts | 1 short | 0 shorts | 0 shorts | 0 shorts | 0 shorts | 0 shorts | 1 short | 0 shorts | 0 shorts | 1 short |
| OB2 | 1 short | 0 shorts | 0 shorts | 0 shorts | 1 short | 0 shorts | 1 short | 1 short | 0 shorts | 0 shorts | 0 shorts | 1 short |
| IB | 1 short | 0 shorts | 0 shorts | 1 short | 0 shorts | 0 shorts | 0 shorts | 0 shorts | 1 short | 0 shorts | 0 shorts | 1 short |

| |
|---|
| ok |
| 1 short |
| 1-2 shorts |
| Clear vs Source |

# Outline & Motivation

1. Short introduction to the device testing

2. Results
   - Global tests on the modules to get info on:
     1. Diode integrity (n+ & p+ region)
     2. Shorts in the polylines (Gate & ClearGate)
   - Tests of DEPFET transfer characteristics at one gate row to get info on:
     1. Opens (Drainlines)
     2. Shorts (Drainlines)
     3. Pedestal Currents and other Transistor characteristics

→ precise localisation of faulty drainlines
→ possibility of rework in faulty areas

# Wafer and chip layout

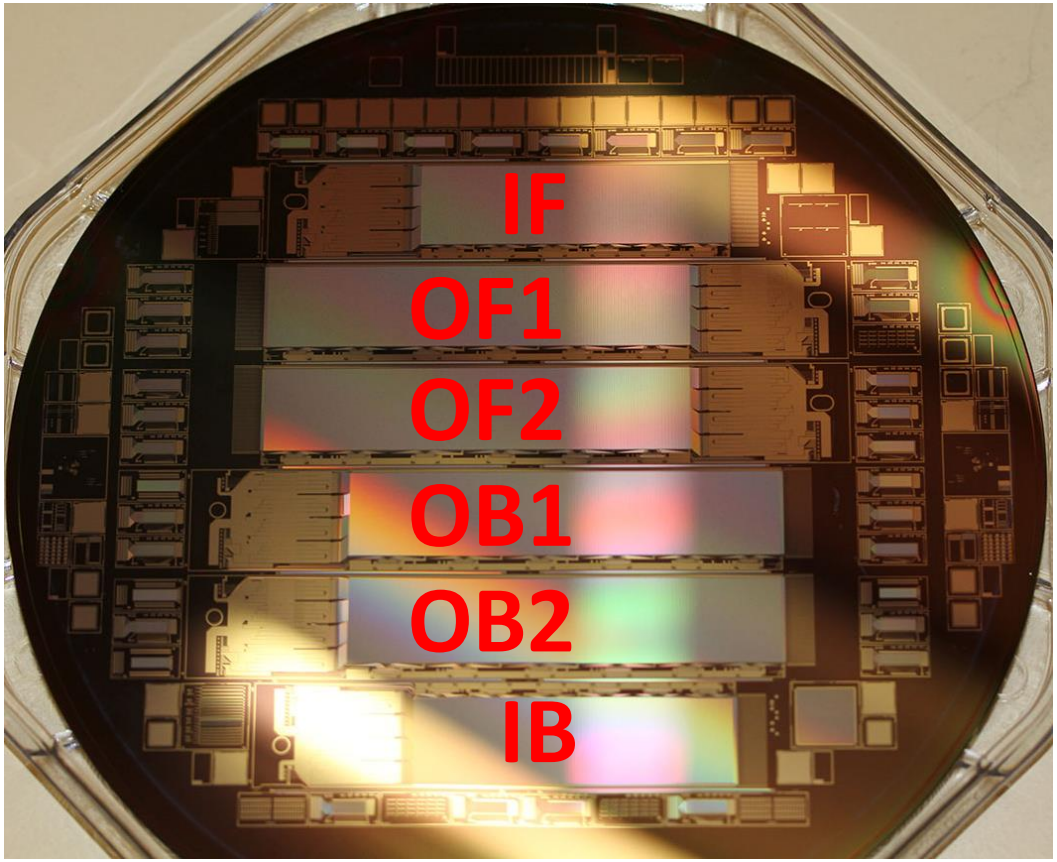


Each wafer has 6 modules/chips:

- Inner forward (IF)
- Outer forward (OF1)
- Outer forward (OF2)
- Outer backward (OB1)
- Outer backward (OB2)
- Inner backward (IB)

# Wafer and chip layout

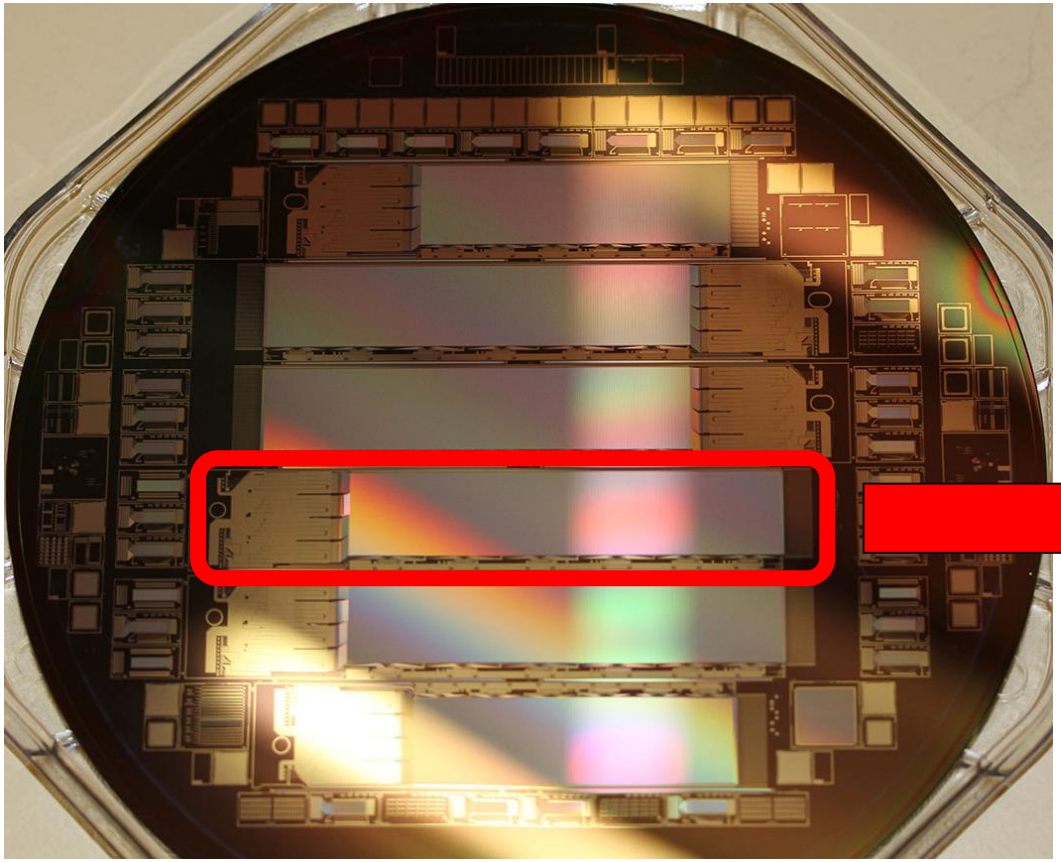

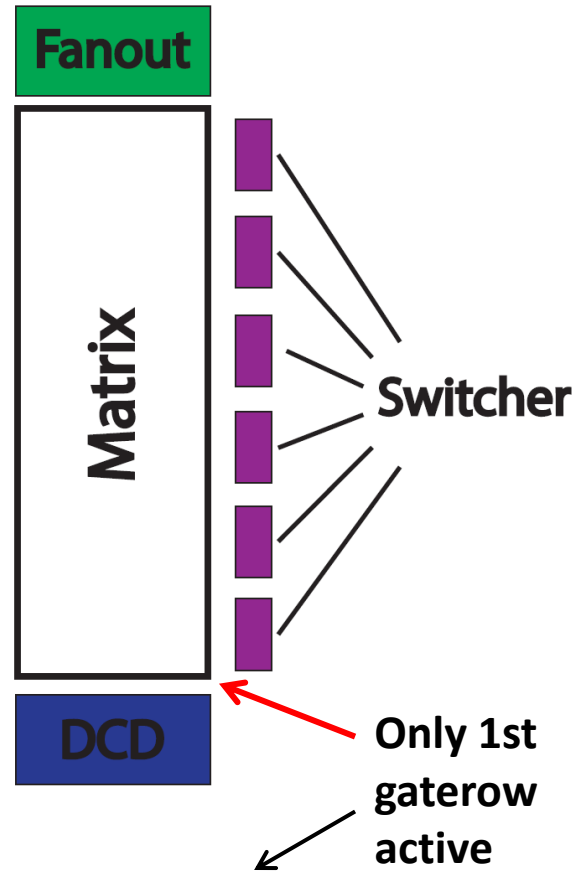


Test of the full drainlines

# Probecardtest

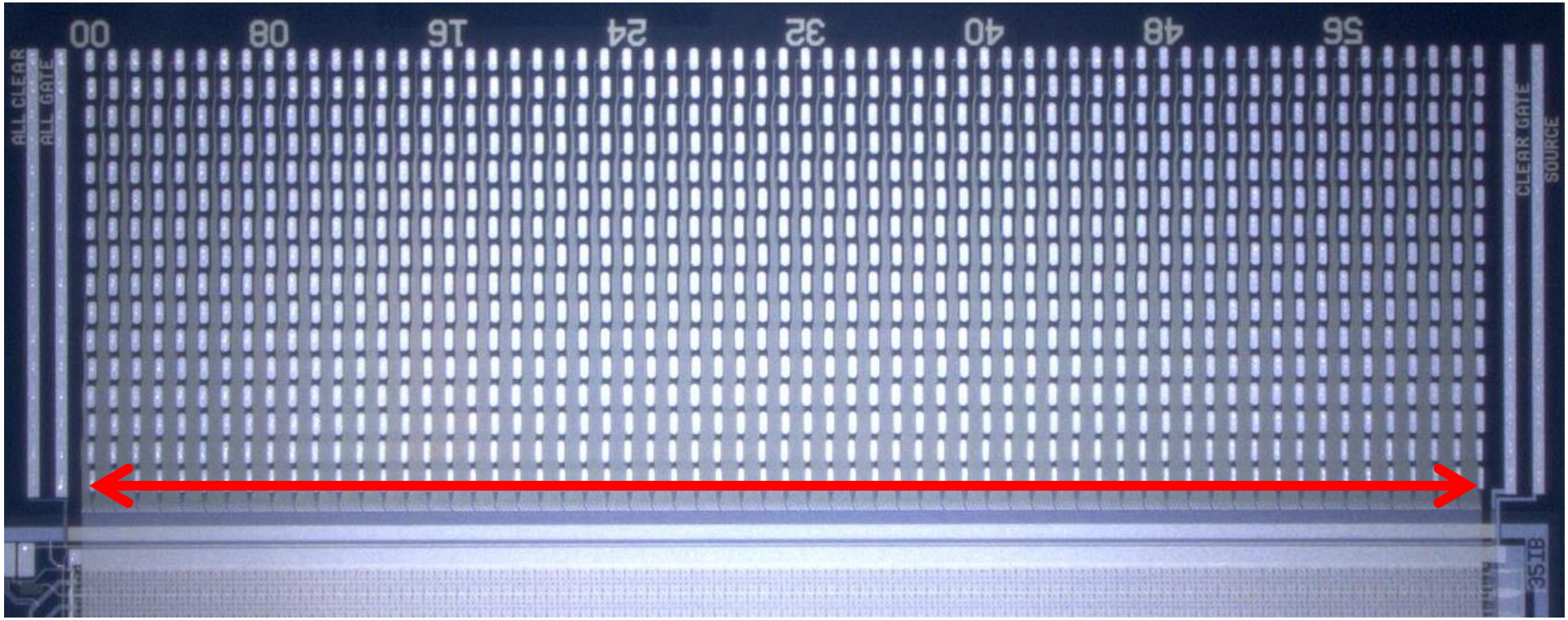


**1000 Drain Pads**

**All Clear**
**All Gate**

**Clear Gate**
**Source**

# System description

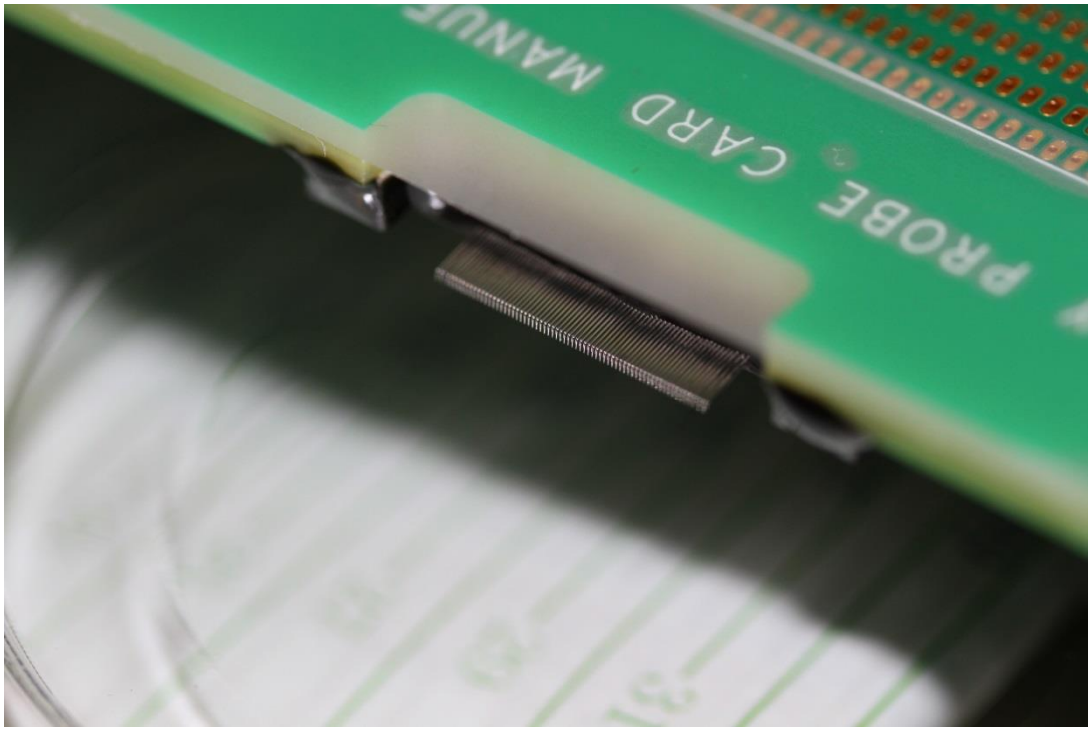


- Probecard with 134 needles in total, arranged in two rows. 126 needles for the drain lines and 4 needles per row for the static voltages.
- Probecard is connected via two ribbon cables to a conversion board
- Conversion board distributes the currents to the SMUs and the voltages to the probecard
- The 126 drain lines are connected to 7 SMUs → 18 drain lines per SMU
- The 4 static voltages are connected to 1 SMU each
- 1 SMU is used for the single needle for the gate rows.
- → 12 SMUs in total

# Probecardtest

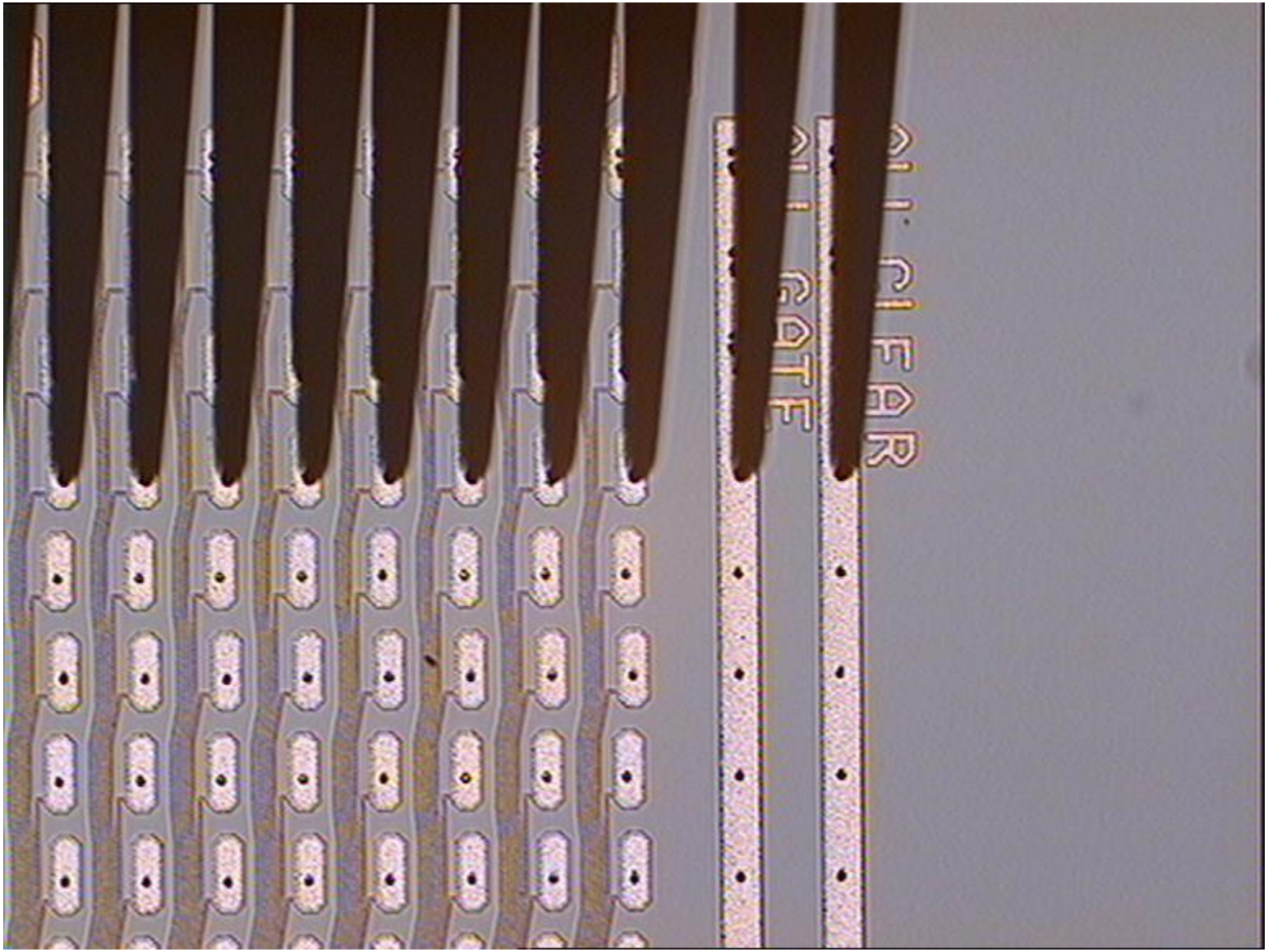

# Drain Currents – Transfer characteristics

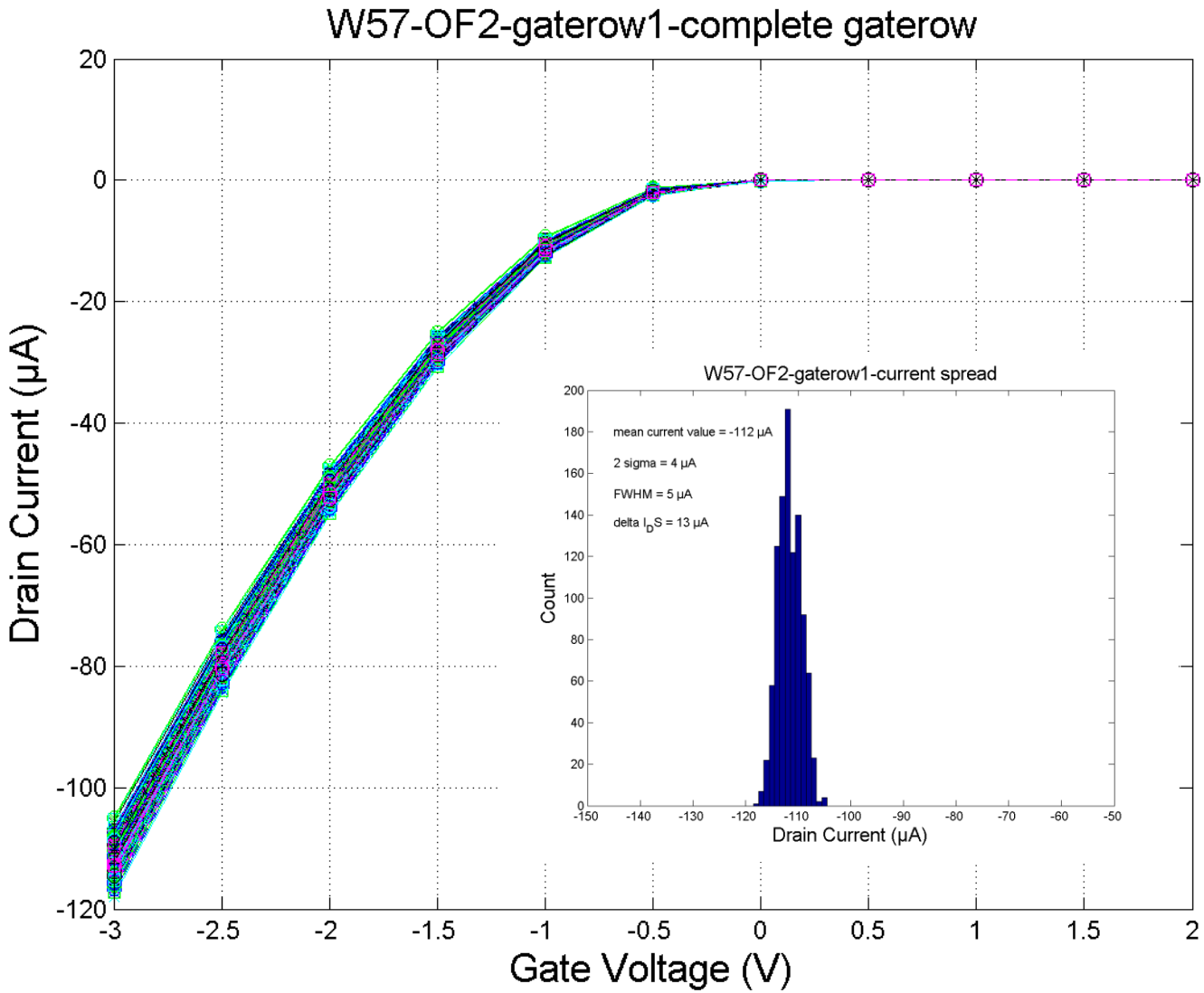

Please remember:

- Main measurement goal: To locate and repair possible faults
- All the values (Threshold, Drain currents and pedestal spread) are just from the first gaterow and from static measurements!

# Threshold voltage – Saturation ($V_{DS} = -5$ V)

Threshold calculation according to:
Dieter K. Schroder: Semiconductor material and device characterisation. Arizona State University (2006), p.225.

- Take the square root of the absolute values
- Fit for Gate voltages of -3 V to -1 V
- Get the value of the gate voltage at $I_{DS} = 0\ \mu A$

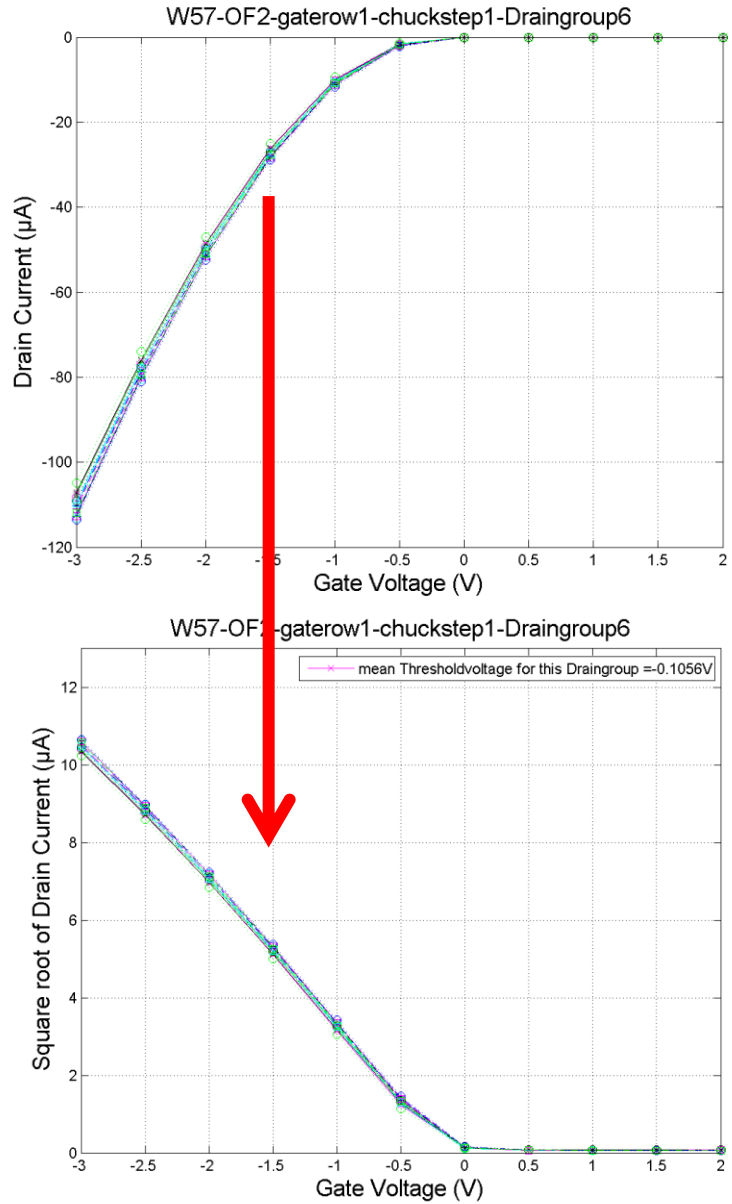


Threshold voltage mostly around -0.1V

# Mean threshold voltage

All values in V

$V_{DS} = -5$ V, $V_{GS} = -3\,V \nearrow +2\,V$

| | W50 | W51 | W52 | W53 | W54 | W55 | W56 | W57 | W58 | W59 | W60 | W61 |
|---|---|---|---|---|---|---|---|---|---|---|---|---|
| IF | not tested | not tested | -0,06 | -0,11 | -0,09 | -0,1 | -0,06 | -0,05 | -0,13 | -0,12 | not testable | -0,07 |
| OF1 | | | | -0,09 | | -0,08 | -0,1 | -0,06 | -0,11 | -0,08 | -0,06 | -0,06 |
| OF2 | | | | | | -0,07 | -0,06 | -0,09 | -0,11 | -0,1 | -0,09 | -0,08 |
| OB1 | -0,1 | 0,02 | -0,09 | -0,14 | -0,12 | -0,14 | -0,15 | -0,11 | -0,13 | -0,13 | -0,11 | -0,12 |
| OB2 | -0,07 | 0,01 | -0,08 | -0,14 | -0,13 | -0,14 | -0,12 | -0,08 | -0,15 | -0,13 | not testable | -0,12 |
| IB | -0,24 | -0,03 | -0,23 | -0,26 | -0,24 | -0,26 | -0,2 | -0,22 | -0,26 | -0,25 | -0,27 | -0,21 |

Mean threshold voltage in previous productions was about ~-0,08 V → comparable

# Drain Currents – Transfer characteristics

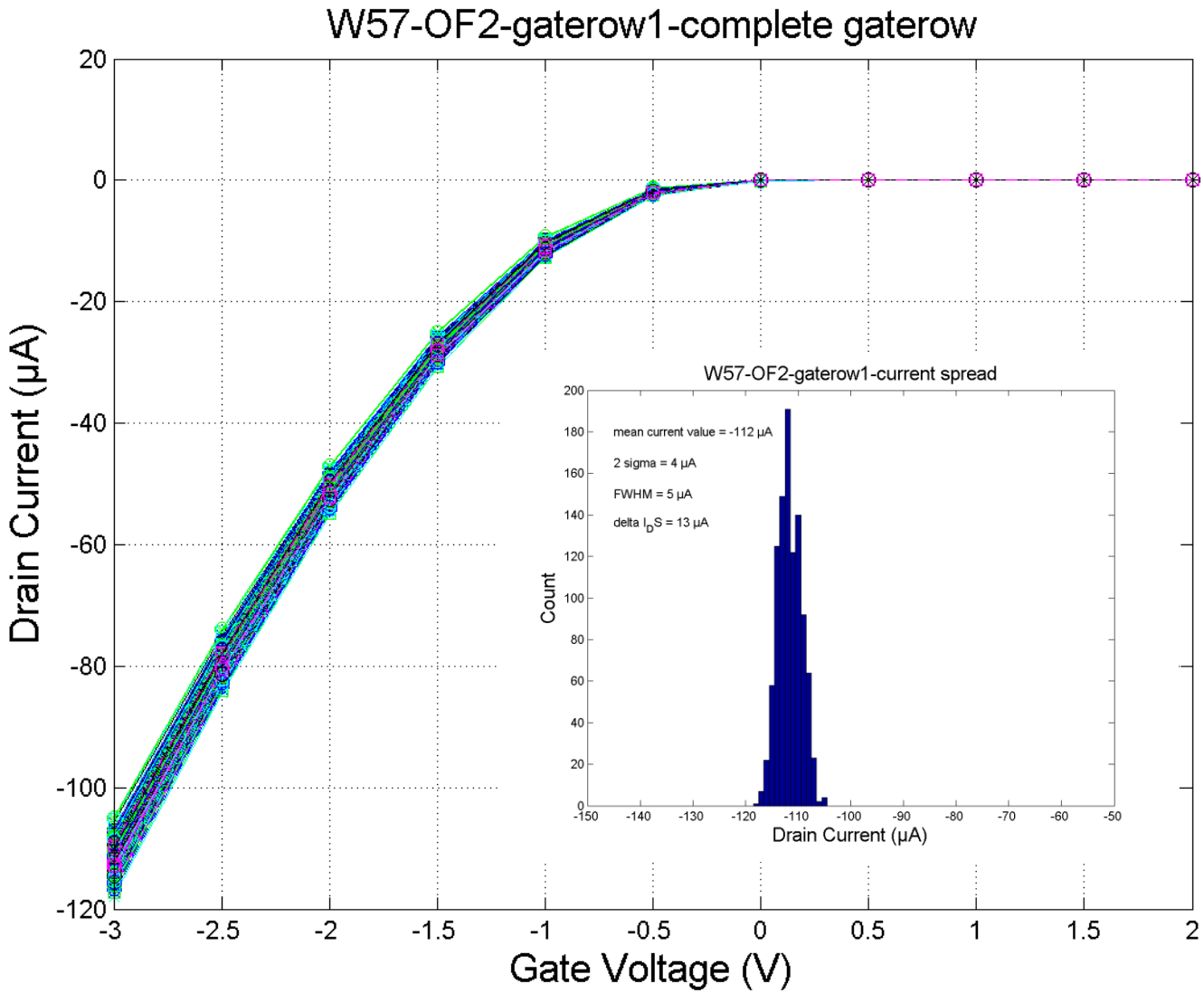

# Mean Drain Currents – Transfer characteristics

All values in µA

$V_{DS} = -5$ V, $V_{GS} = -3\,V$

| | W50 | W51 | W52 | W53 | W54 | W55 | W56 | W57 | W58 | W59 | W60 | W61 |
|---|---|---|---|---|---|---|---|---|---|---|---|---|
| IF | not tested | not tested | -117 | -110 | -111 | -110 | -117 | -119 | -109 | -109 | not testable | -114 |
| OF1 | | | | -110 | | -109 | -110 | -114 | -109 | -111 | -113 | -112 |
| OF2 | | | | | | -106 | -112 | -112 | -108 | -110 | -111 | -112 |
| OB1 | -112 | -136 | -112 | -105 | -108 | -105 | -106 | -111 | -107 | -108 | -109 | -106 |
| OB2 | -117 | -141 | -115 | -108 | -108 | -106 | -110 | -116 | -107 | -109 | not testable | -109 |
| IB | -99 | -129 | -100 | -95 | -96 | -94 | -103 | -101 | -95 | -94 | -94 | -102 |

Mean Drain currents in previous productions was about ~-108 µA → comparable

# Pedestal spread

All values in µA

$V_{DS} = -5$ V, $V_{GS} = -3\,V$

| | W50 | W51 | W52 | W53 | W54 | W55 | W56 | W57 | W58 | W59 | W60 | W61 |
|---|---|---|---|---|---|---|---|---|---|---|---|---|
| IF | not tested | not tested | 24 | 25 | 25 | 24 | 24 | 25 | 25 | 24 | not testable | 32 |
| OF1 | | | | 22 | | 19 | 14 | 13 | 12 | 20 | 15 | 20 |
| OF2 | | | | | | 19 | 20 | 13 | 16 | 12 | 14 | 18 |
| OB1 | 26 | 32 | 23 | 25 | 25 | 21 | 21 | 19 | 18 | 21 | 20 | 16 |
| OB2 | 22 | 28 | 23 | 20 | 22 | 27 | 26 | 23 | 17 | 20 | not testable | 20 |
| IB | 31 | 33 | 33 | 31 | 30 | 27 | 31 | 28 | 27 | 30 | 31 | 36 |

The pedestal spreads here are the upper limit(!!!), since a less good contact with a needle leads to lower currents => bigger spreads

Mean pedestal spreads in previous productions was about ~18 µA → comparable

# Example of the mapping from PXD9-6

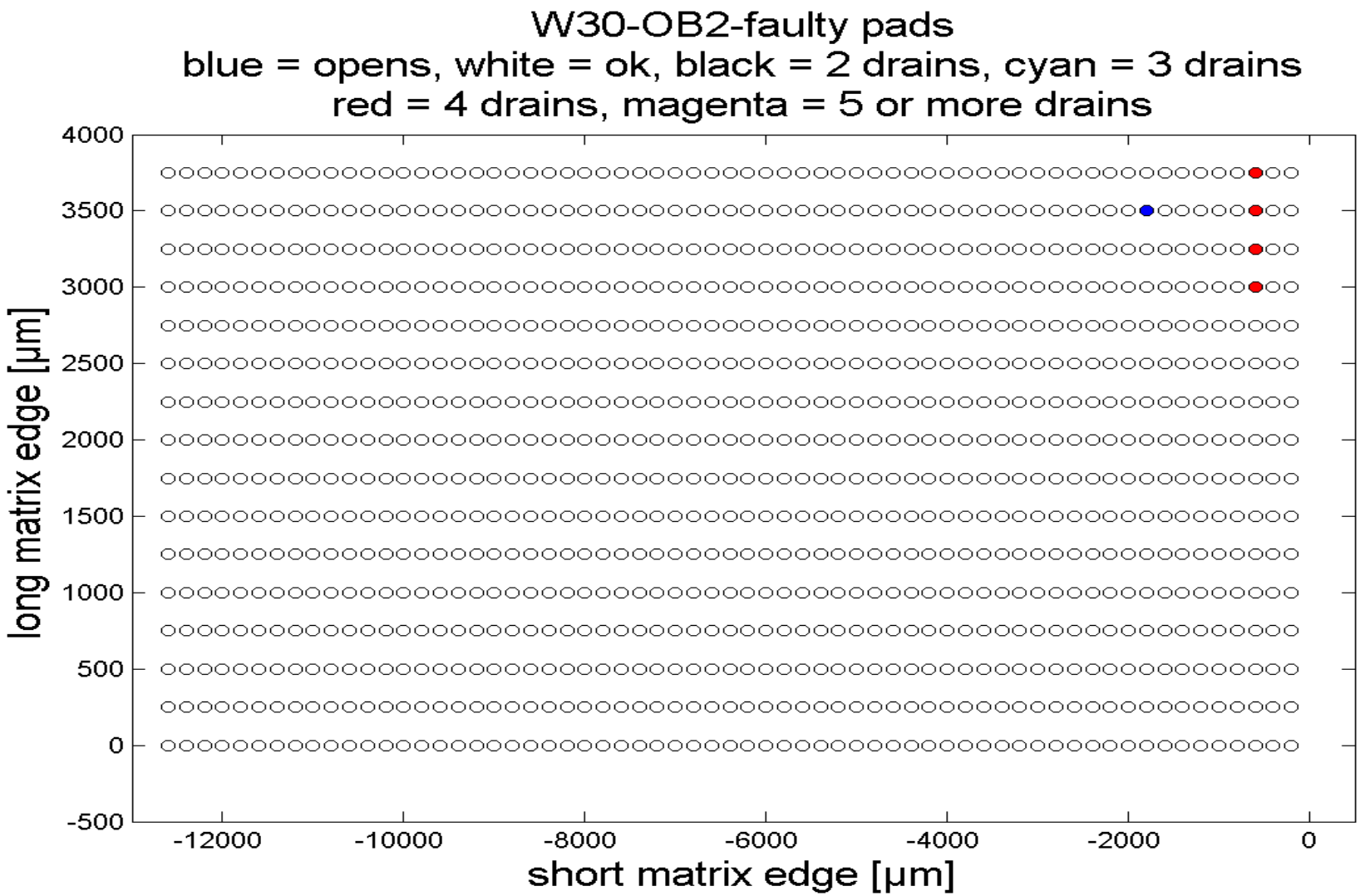

# W30 (PXD9-6)– short in OB2

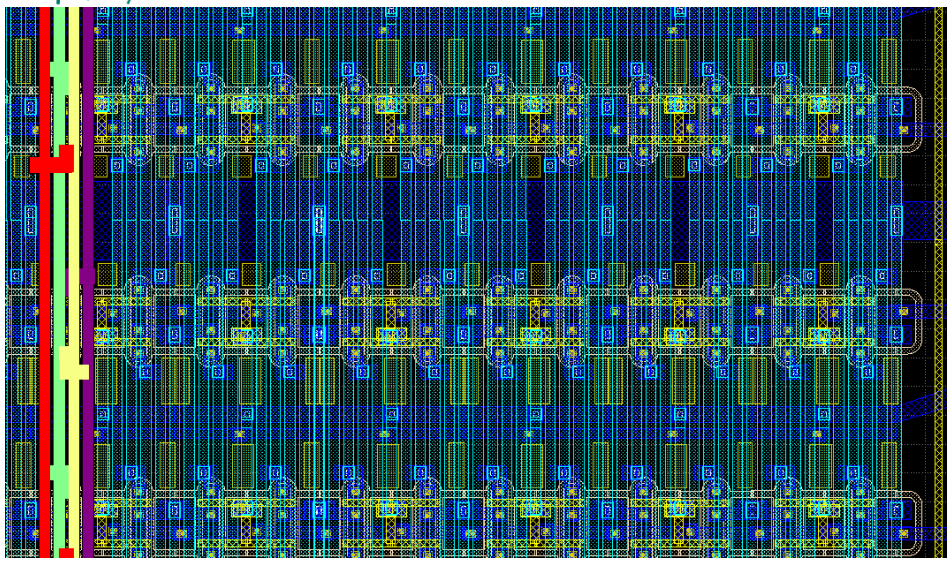

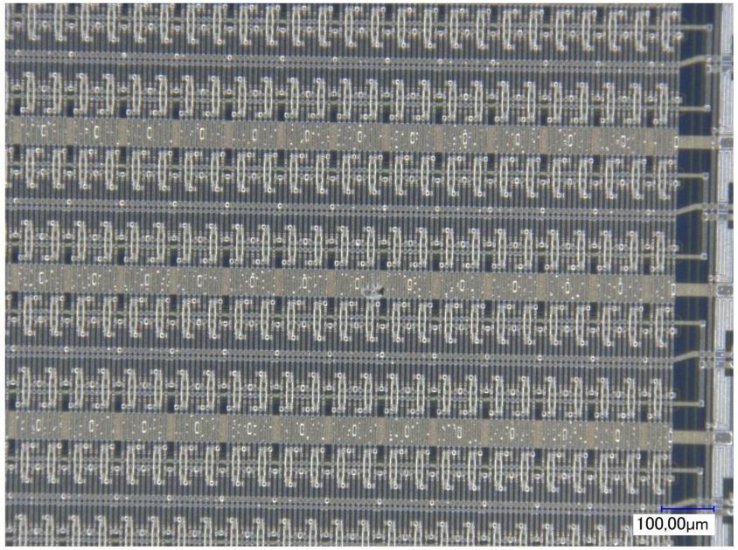


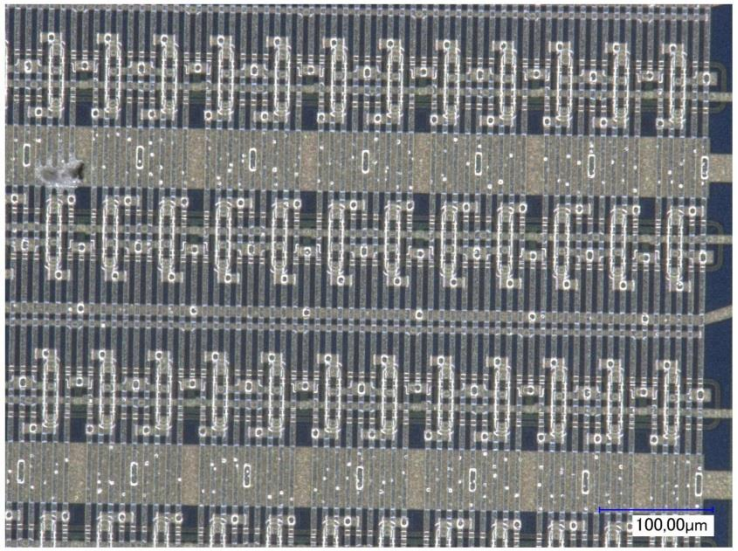


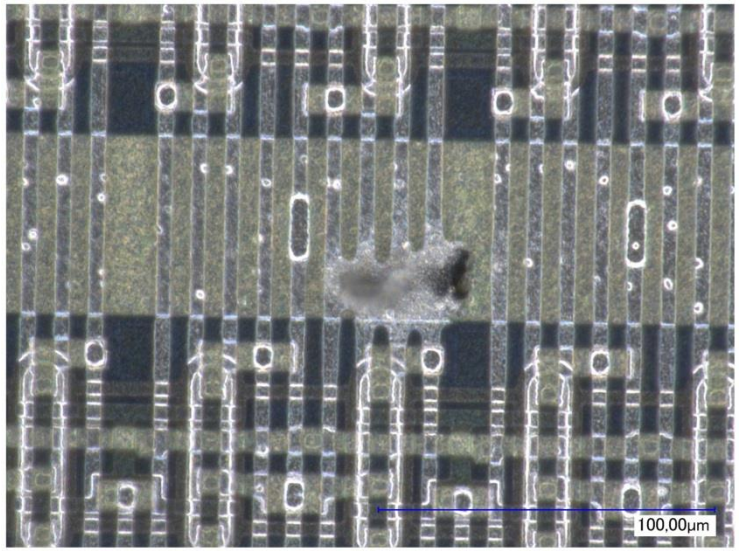

# Opens

Scratched in the test fan-out by me. No damage to the module! But untestable?

| | W50 | W51 | W52 | W53 | W54 | W55 | W56 | W57 | W58 | W59 | W60 | W61 |
|---|---|---|---|---|---|---|---|---|---|---|---|---|
| IF | not tested | not tested | 0 | 0 | 0 | 0 | 0 | 0 | 0 | 0 | not testable | 0 |
| OF1 | | | | 1 | | 0 | 0 | 0 | 0 | 0 | 0 | 0 |
| OF2 | | | | | | 0 | 0 | 0 | 0 | 0 | 0 | 0 |
| OB1 | 0 | 0 | 0 | 0 | 0 | 0 | 0 | 0 | 0 | 0 | 0 | 0 |
| OB2 | 0 | 0 | 0 | 0 | 0 | 0 | 0 | 0 | 0 | 0 | not testable | 0 |
| IB | 1 | 0 | 0 | 0 | 0 | 0 | 0 | 0 | 0 | 0 | 0 | 0 |

Not tested in order to not delay processing & enough OF modules already

# Shorts

| | W50 | W51 | W52 | W53 | W54 | W55 | W56 | W57 | W58 | W59 | W60 | W61 |
|---|---|---|---|---|---|---|---|---|---|---|---|---|
| IF | not tested | not tested | 0 | 0 | 0 | 2 Drains | 2 Drains | 0 | 0 | 0 | not testable | 0 |
| OF1 | | | | 0 | | 0 | 0 | 0 | 1 D-S 4 Drains | 0 | 0 | 0 |
| OF2 | | | | | | 4 weak D-G? | 0 | 0 | 0 | 2 D-S | 0 | 0 |
| OB1 | 0 | 0 | 0 | 0 | 2 Drains | 0 | 0 | 0 | 0 | 0 | 6 Drains | 0 |
| OB2 | 0 | 0 | 0 | 0 | 0 | 0 | 0 | 3 G-D | 1 D-G? | 0 | not testable | 0 |
| IB | 0 | 0 | 2 Drains | 0 | 0 | 0 | 0 | 0 | 1 weak D-G | 0 | 0 | 0 |

G-D = Gate-Drain short = inverts Drain & Source

D-S = Drain-Source short = too much current to the DCD

=> Repaired by removing the drain lines

# Final yield PXD9-20: prober measurements

| | W50 | W51 | W52 | W53 | W54 | W55 | W56 | W57 | W58 | W59 | W60 | W61 |
|---|---|---|---|---|---|---|---|---|---|---|---|---|
| IF | NA | 0 | 100 | 100 | 100 | 98.8 | 99.8 | 100 | 100 | 100 | 0 | 100 |
| OF1 | NA | NA | NA | 99.9 | NA | 100 | 100 | 100 | 0 | 100 | 100 | 100 |
| OF2 | NA | NA | NA | NA | NA | 0 | 100 | 100 | 100 | 99.8 | 100 | 0 |
| OB1 | 100 | 100 | 99.5 | 100 | 99.8 | 100 | 100 | 100 | 99.5 | 100 | 99.4 | 0 |
| OB2 | 0 | 100 | 100 | 100 | 99.5 | 100 | 99.5 | 99.2 | 0 | 100 | 0 | 0 |
| IB | 0 | 100 | 99.8 | 99.5 | 100 | 100 | 100 | 100 | 99.3 | 100 | 100 | 99.5 |

Only the results of the global tests. No tests on the opens, shorts or critical shorts!

# Final results PXD9-20: prober measurements

| | Total | defect | Not tested | <95% | 95% | 98% | ≥99% | PXD complete |
|---|---|---|---|---|---|---|---|---|
| Inner Forward | 12 | 2 | 1 | 0 | 0 | 0 | 9-10 | 8 |
| Outer Forward | 24 | 3 | 9 | 0 | 0 | 0 | 12+ | 12 |
| Outer Backward | 24 | 5 | 0 | 0 | 0 | 0 | 19 | 12 |
| Inner Backward | 12 | 1 | 0 | 0 | 0 | 0 | 11 | 8 |

Enough good modules to form one complete PXD detector. And there is an additional backup production coming!

Thanks for your attention!

Question?

# PXD9 – Clear vs Source

| | W01 | W02 | W03 | W04 | W05 | W06 | W07 | W08 | W09 | W10 | W11 | W12 | W13 | W30 | W31 |
|---|---|---|---|---|---|---|---|---|---|---|---|---|---|---|---|
| IF | bad | ok | ok | ok | ok | ok | dead | ok | ok | ok | ok | bad | ok | ok | ok |
| OF1 | ok | ok | bad | ok | ok | ok | dead | bad | ok | ok | ok | ok | ok | ok | ok |
| OF2 | bad | bad | ok | bad | ok | ok | dead | ok | ok | ok | ok | med | bad | ok | ok |
| OB1 | ok | bad | ok | med | ok | ok | dead | ok | ok | ok | bad | ok | bad | ok | ok |
| OB2 | bad | bad | bad | bad | bad | bad | dead | ok | med | bad | bad | ok | ok | ok | ok |
| IB | ok | med | ok | med | ok | med | dead | bad | ok | bad | med | bad | ok | ok | ok |

| | W32 | W33 | W35 | W36 | W37 | W38 | W40 | W41 | W42 | W43 | W44 | W45 | W46 | W47 |
|---|---|---|---|---|---|---|---|---|---|---|---|---|---|---|
| IF | ok | bad | ok | ok | ok | bad | ok | ok | ok | ok | ok | med | ok | ok |
| OF1 | ok | ok | ok | ok | ok | bad | ok | ok | bad | ok | ok | ok | ok | ok |
| OF2 | ok | ok | med | ok | bad | bad | med | bad | med | bad | ok | ok | ok | bad |
| OB1 | bad | ok | ok | bad | ok | ok | med | bad | ok | bad | ok | bad | ok | bad |
| OB2 | ok | bad | bad | ok | ok | bad | ok | bad | ok | med | ok | ok | ok | bad |
| IB | ok | bad | med | ok | ok | ok | ok | ok | ok | ok | ok | ok | ok | ok |

- Test of all p-regions vs n-regions => Test of the Diode Integrity

- In case of just one short => module is considered bad
- Shorts are not specified => further tests would be required

| | | | |
|---|---|---|---|
| IF | 23 | 1 | 5 |
| OF1 | 24 | 0 | 5 |
| OF2 | 15 | 4 | 10 |
| OB1 | 17 | 2 | 10 |
| OB2 | 13 | 2 | 14 |
| IB | 19 | 5 | 5 |

# PXD9 – Clear vs Source

| | | PXD9-6 | | | PXD9-7 | | | PXD9-8 | | | PXD9-9 | | | PXD9-10 | |
|---|---|---|---|---|---|---|---|---|---|---|---|---|---|---|---|
| IF | 3 | 0 | 0 | 3 | 0 | 1 | 7 | 1 | 1 | 5 | 0 | 1 | 5 | 0 | 2 |
| OF1 | 3 | 0 | 0 | 3 | 0 | 1 | 8 | 0 | 1 | 5 | 0 | 1 | 5 | 0 | 2 |
| OF2 | 2 | 1 | 0 | 1 | 1 | 2 | 5 | 1 | 3 | 3 | 0 | 3 | 4 | 1 | 2 |
| OB1 | 2 | 0 | 1 | 3 | 1 | 0 | 4 | 0 | 5 | 4 | 1 | 1 | 4 | 0 | 3 |
| OB2 | 2 | 0 | 1 | 3 | 0 | 1 | 5 | 1 | 3 | 0 | 0 | 6 | 3 | 1 | 3 |
| IB | 2 | 1 | 0 | 4 | 0 | 0 | 8 | 0 | 1 | 3 | 3 | 0 | 2 | 1 | 4 |

With PXD9-6

| | | | |
|---|---|---|---|
| IF | 23 | 1 | 5 |
| OF1 | 24 | 0 | 5 |
| OF2 | 15 | 4 | 10 |
| OB1 | 17 | 2 | 10 |
| OB2 | 13 | 2 | 14 |
| IB | 19 | 5 | 5 |

Without PXD9-6

| | | | |
|---|---|---|---|
| IF | 20 | 1 | 5 |
| OF1 | 21 | 0 | 5 |
| OF2 | 13 | 3 | 10 |
| OB1 | 15 | 2 | 9 |
| OB2 | 11 | 2 | 13 |
| IB | 17 | 4 | 5 |

- Test of all p-regions vs n-regions => Test of the Diode Integrity
- In case of just one short => module is considered bad
- Shorts are not specified => further tests would be required

| | | | |
|---|---|---|---|
| IF | 20 | 1 | 5 |
| OF | 34 | 3 | 15 |
| OB | 26 | 4 | 22 |
| IB | 17 | 4 | 4 |

# PXD9 – Shorts between Poly1 and Poly2

| | W01 | W02 | W03 | W04 | W05 | W06 | W07 | W08 | W09 | W10 | W11 | W12 | W13 | W30 | W31 |
|---|---|---|---|---|---|---|---|---|---|---|---|---|---|---|---|
| IF | 3+ | 1-2 | 2 | 2 | 1 | 1 | bad | 1 | 1 | 1-2 | 1 | 0 | 1 | 2-3 | 1-2 |
| OF1 | 0 | 1-2 | 1 | 1 | 1 | 2 | bad | 1-2 | 2 | 2+ | 2 | 2 | 3 | 0-1 | 1-3 |
| OF2 | 2+ | 2 | 0 | 2+ | 1 | 3+ | bad | 1 | 1 | 2+ | 2 | 2 | 2+ | 1 | 1-2 |
| OB1 | 0 | 2 | 1 | 1-2 | 2 | 2 | 0* | 2 | 1-2 | 2+ | 3+** | 1 | 2+ | 2+ | 1 |
| OB2 | 1 | 2 | 1 | 1 | 2 | 2 | bad | 1-2 | 1 | 2+ | 2 | 2 | 2+ | 1 | 1 |
| IB | 0 | 2 | 0 | 1 | 2+ | 1 | bad | 1 | 0 | 1-2 | 2 | 1 | 1-2 | 2+ | 0 |

*Increased resistance in the AllClearGate_vs_Source and AllGate_vs_AllClearGate tests
**very low resistance in AllGate vs Source test

| | W32 | W33 | W35 | W36 | W37 | W38 | W40 | W41 | W42 | W43 | W44 | W45 | W46 | W47 |
|---|---|---|---|---|---|---|---|---|---|---|---|---|---|---|
| IF | 0 | 2+ | 2-3 | 1-2 | 2+ | 1-2 | 0 | 1 | 1 | 0 | 1-2 | 1 | 1 | 1 |
| OF1 | 1 | 0 | 2-3 | 1-2 | 2+ | 2+ | 1 | 1 | 0 | 0 | 0 | 1 | 0 | 2-3 |
| OF2 | 0 | 0 | 1-2 | 1 | 2+ | 2+ | 1 | 1 | 0 | 1 | 0 | 0 | 0 | 2+ |
| OB1 | 1-2 | 1 | 0 | 1-2 | 2+ | 2+ | 0 | 2+ | 1 | 2+ | 1-2 | 1 | 1 | 2+ |
| OB2 | 0 | 1-2 | 2+ | 1-2 | 1 | 2+ | 0 | 2+ | 0 | 0 | 0 | 0 | 0 | 2+ |
| IB | 0 | 2-3 | 0 | 1 | 1-3 | 1-3 | 0 | 0 | 0 | 0 | 0 | 0 | 1 | 1 |

# PXD9 – Opens

| | W01 | W02 | W03 | W04 | W05 | W06 | W07 | W08 | W09 | W10 | W11 | W12 | W13 | W30 | W31 |
|---|---|---|---|---|---|---|---|---|---|---|---|---|---|---|---|
| IF | 29 | 0 | 0 | 0 | 2 | 0 | bad | 0 | 1 | 0 | 0 | 0 | 0 | 0 | 0 |
| OF1 | 4 | 0 | 3 | 2 | 0 | 1 | bad | 0 | 0 | 0 | 0 | 0 | 0 | 1 | 0 |
| OF2 | 2 | 0 | 6 | 4 | 2 | 0 | bad | 0 | 0 | 0 | 0 | 1 | 0 | 0 | 0 |
| OB1 | 0 | 0 | 0 | 0 | 0 | 0 | bad | 0 | 0 | 0 | 0 | 0 | 0 | 0 | 0 |
| OB2 | 5 | 1 | 0 | 0 | 1 | 0 | bad | 0 | 0 | 8 | 2 | 0 | 0 | 1 | 0 |
| IB | 56 | 0 | 0 | 0 | 0 | 0 | bad | 0 | 0 | 0 | 3 | 0 | 0 | --- | --- |

| | W32 | W33 | W35 | W36 | W37 | W38 | W40 | W41 | W42 | W43 | W44 | W45 | W46 | W47 |
|---|---|---|---|---|---|---|---|---|---|---|---|---|---|---|
| IF | 0 | 0 | 0 | 0 | 0 | 0 | 0 | 0 | 2 | 0 | 0 | 0 | 0 | 0 |
| OF1 | 0 | 0 | 0 | 0 | 1 | 0 | 0 | 0 | 0 | 0 | 0 | 0 | 0 | 0 |
| OF2 | 0 | 0 | 0 | 0 | 0 | 0 | 0 | 0 | 0 | 0 | 0 | 0 | 1 | 0 |
| OB1 | 0 | 0 | 0 | 0 | 0 | 1 | 0 | 0 | 0 | bad | 0 | 0 | 0 | 0 |
| OB2 | 0 | 0 | 0 | 0 | 0 | 3 | 1 | 0 | 0 | 1 | 0 | 0 | 0 | 0 |
| IB | 0 | 0 | --- | --- | --- | --- | --- | 0 | 0 | 0 | 0 | 0 | 0 | 0 |

# PXD9 – Shorts

| | W01 | W02 | W03 | W04 | W05 | W06 | W07 | W08 | W09 | W10 | W11 | W12 | W13 | W30 | W31 |
|---|---|---|---|---|---|---|---|---|---|---|---|---|---|---|---|
| IF | 0 | 0 | 0 | 0 | 0 | 7 D-S + 2 | bad | 0 | 0 | 2 | 2 G-D | 0 | 2 | 83* | 1+1 D-S |
| OF1 | 0 | 0 | 2 | 0 | 0 | 0 | bad | 0 | 0 | 0 | 0 | 0 | 0 | 0 | 0 |
| OF2 | 0 | 0 | 0 | 2 | 0 | 2 | bad | 0 | 0 | 2 | 2 | 0 | 2 D-S | 0 | 0 |
| OB1 | 0 | 1 D-S | 0 | 0 | 0 | 0 | bad | 0 | 0 | 0 | 12 | 2 | 2 D-S | 2 | 1 G-D |
| OB2 | 0 | 0 | 1 D-S | 0 | 0 | 0 | bad | 0 | 0 | 0 | 2 | 3 | 0 | 4 | 0 |
| IB | 0 | 0 | 0 | 0 | 0 | 0 | bad | 0 | 0 | 0 | 5 | 0 | 0 | --- | --- |

| | W32 | W33 | W35 | W36 | W37 | W38 | W40 | W41 | W42 | W43 | W44 | W45 | W46 | W47 |
|---|---|---|---|---|---|---|---|---|---|---|---|---|---|---|
| IF | 0 | 0 | 0 | 0 | 0 | 2 | 0 | 0 | 2 | 0 | 0 | 2 | 0 | 0 |
| OF1 | 0 | 0 | 0 | 0 | 2 | 0 | 0 | 0 | 0 | 0 | 0 | 0 | 0 | 3 G-D |
| OF2 | 0 | 0 | 0 | 0 | 0 | 0 | 2 | 2 | 0 | 0 | 0 | 0 | 0 | 0 |
| OB1 | 0 | 0 | 6* | 0 | 0 | 4 D-S | 0 | 0 | 0 | bad | 2 | 0 | 0 | 0 |
| OB2 | 0 | 0 | 5 | 2 | 0 | 0 | 0 | 0 | 0 | 1 | 0 | 0 | 0 | 0 |
| IB | 0 | 0 | --- | --- | --- | --- | --- | 0 | 0 | 0 | 0 | 0 | 0 | 0 |

*Scratched during testing, had been 0 before
Normal short: repairable by 2nd etch after Me2
D-S: Drain to Source (Me2-Me2) short, affecting one drain line -> repairable by 2nd etch after Me2
G-D: Gate to Drain (Me1-Me2) short, affecting one drain line -> repaired by removing the drainline

# PXD9 – mean Pedestal currents of one gaterow

| | W01 | W02 | W03 | W04 | W05 | W06 | W07 | W08 | W09 | W10 | W11 | W12 | W13 | W30 | W31 |
|---|---|---|---|---|---|---|---|---|---|---|---|---|---|---|---|
| IF | -102 | -104 | -110 | -103 | -103 | -109 | bad | -101 | -116 | -104 | -111 | -112 | -106 | -95 | -110 |
| OF1 | -105 | -103 | -110 | -106 | -105 | -113 | bad | -102 | -113 | -107 | -117 | -115 | -113 | -106 | -111 |
| OF2 | -94 | -100 | -99 | -96 | -103 | -102 | bad | -97 | -108 | -95 | -107 | -110 | -99 | -102 | -106 |
| OB1 | -95 | -98 | -97 | -98 | -97 | -100 | bad | -95 | -113 | -95 | -105 | -105 | -96 | -99 | -100 |
| OB2 | -95 | -96 | -103 | -96 | -105 | -105 | bad | -100 | -106 | -96 | -107 | -107 | -104 | -104 | -99 |
| IB | -86 | -88 | -94 | -89 | -103 | -98 | bad | -92 | -97 | -87 | -101 | -101 | -97 | --- | --- |

| | W32 | W33 | W35 | W36 | W37 | W38 | W40 | W41 | W42 | W43 | W44 | W45 | W46 | W47 |
|---|---|---|---|---|---|---|---|---|---|---|---|---|---|---|
| IF | -120 | -124 | -129 | -122 | -122 | -125 | -125 | -129 | -128 | -137 | -155 | -139 | -146 | -155 |
| OF1 | -119 | -121 | -122 | -123 | -126 | -118 | -125 | -125 | -137 | -137 | -136 | -139 | -135 | -148 |
| OF2 | -114 | -118 | -114 | -117 | -120 | -118 | -120 | -120 | -122 | -130 | -128 | -133 | -130 | -137 |
| OB1 | -105 | -115 | -114 | -111 | -115 | -115 | -118 | -124 | -121 | bad | -126 | -133 | -134 | -137 |
| OB2 | -106 | -115 | -114 | -110 | -117 | -125 | -118 | -123 | -124 | -131 | -131 | -130 | -132 | -136 |
| IB | -101 | -107 | --- | --- | --- | --- | --- | -108 | -111 | -118 | -126 | -119 | -115 | -124 |

# PXD9 – Pedestal spread (upper limit)

| | W01 | W02 | W03 | W04 | W05 | W06 | W07 | W08 | W09 | W10 | W11 | W12 | W13 | W30 | W31 |
|---|---|---|---|---|---|---|---|---|---|---|---|---|---|---|---|
| IF | 27 | 13 | 14 | 12 | 16 | 13 | bad | 10 | 17 | 14 | 17 | 19 | 12 | 41 | 22 |
| OF1 | 14 | 13 | 15 | 12 | 17 | 16 | bad | 16 | 21 | 17 | 21 | 25 | 17 | 30 | 22 |
| OF2 | 16 | 13 | 15 | 15 | 16 | 17 | bad | 16 | 11 | 23 | 16 | 18 | 12 | 24 | 21 |
| OB1 | 15 | 12 | 15 | 14 | 16 | 19 | bad | 17 | 22 | 14 | 21 | 13 | 23 | 21 | 17 |
| OB2 | 18 | 14 | 12 | 15 | 17 | 14 | bad | 13 | 15 | 22 | 18 | 13 | 14 | 24 | 18 |
| IB | 18 | 20 | 17 | 14 | 16 | 15 | bad | 16 | 13 | 13 | 17 | 18 | 14 | --- | --- |

| | W32 | W33 | W35 | W36 | W37 | W38 | W40 | W41 | W42 | W43 | W44 | W45 | W46 | W47 |
|---|---|---|---|---|---|---|---|---|---|---|---|---|---|---|
| IF | 20 | 16 | 30 | 27 | 27 | 26 | 29 | 16 | 25 | 26 | 25 | 20 | 16 | 22 |
| OF1 | 17 | 26 | 24 | 31 | 24 | 23 | 21 | 23 | 24 | 23 | 21 | 18 | 26 | 20 |
| OF2 | 18 | 20 | 27 | 31 | 20 | 23 | 18 | 21 | 19 | 25 | 27 | 21 | 18 | 22 |
| OB1 | 16 | 23 | 20 | 25 | 22 | 19 | 22 | 27 | 18 | bad | 19 | 17 | 15 | 25 |
| OB2 | 24 | 19 | 22 | 25 | 24 | 22 | 21 | 19 | 17 | 18 | 19 | 18 | 23 | 22 |
| IB | 15 | 14 | --- | --- | --- | --- | --- | 18 | 14 | 16 | 18 | 22 | 21 | 23 |

# PXD9 – mean Threshold of one gaterow

| | W01 | W02 | W03 | W04 | W05 | W06 | W07 | W08 | W09 | W10 | W11 | W12 | W13 | W30 | W31 |
|---|---|---|---|---|---|---|---|---|---|---|---|---|---|---|---|
| IF | -0,01 | -0,03 | 0,02 | -0,03 | -0,07 | 0,00 | bad | -0,07 | 0,07 | -0,03 | 0,02 | 0,02 | -0,03 | -0,14 | -0,02 |
| OF1 | 0,00 | -0,04 | 0,01 | 0,00 | -0,04 | 0,05 | bad | -0,07 | 0,04 | 0,03 | 0,09 | 0,06 | 0,02 | -0,07 | -0,02 |
| OF2 | -0,15 | -0,06 | -0,12 | -0,11 | -0,05 | -0,10 | bad | -0,12 | 0,00 | -0,14 | -0,02 | 0,00 | -0,11 | -0,07 | -0,08 |
| OB1 | -0,13 | -0,09 | -0,14 | -0,06 | -0,12 | -0,08 | bad | -0,13 | -0,02 | -0,10 | 0,08 | -0,05 | -0,14 | -0,15 | -0,13 |
| OB2 | -0,07 | -0,10 | -0,03 | -0,10 | -0,06 | 0,00 | bad | -0,03 | -0,00 | -0,05 | 0,02 | -0,01 | 0,00 | -0,13 | -0,15 |
| IB | -0,21 | -0,16 | -0,13 | -0,18 | -0,15 | -0,07 | bad | -0,13 | -0,11 | -0,18 | -0,13 | -0,06 | -0,11 | --- | --- |

| | W32 | W33 | W35 | W36 | W37 | W38 | W40 | W41 | W42 | W43 | W44 | W45 | W46 | W47 |
|---|---|---|---|---|---|---|---|---|---|---|---|---|---|---|
| IF | 0,04 | 0,09 | 0,10 | 0,06 | 0,09 | 0,10 | 0,08 | 0,09 | 0,12 | 0,04 | 0,00 | 0,02 | 0,00 | 0,00 |
| OF1 | 0,03 | 0,03 | 0,09 | 0,13 | 0,08 | -0,01 | 0,09 | 0,08 | 0,03 | 0,04 | 0,05 | 0,02 | 0,08 | 0,00 |
| OF2 | -0,02 | 0,01 | 0,01 | 0,10 | 0,04 | 0,01 | 0,05 | 0,05 | 0,04 | 0,12 | 0,08 | 0,12 | 0,12 | 0,04 |
| OB1 | -0,10 | 0,03 | 0,00 | -0,05 | 0,01 | -0,02 | -0,01 | 0,07 | 0,02 | bad | 0,03 | 0,13 | 0,10 | 0,04 |
| OB2 | -0,09 | 0,01 | 0,00 | -0,08 | 0,02 | 0,81 | 0,01 | 0,08 | 0,02 | 0,12 | 0,09 | 0,14 | 0,13 | 0,04 |
| IB | -0,13 | -0,05 | --- | --- | --- | --- | --- | -0,09 | -0,12 | 0,01 | 0,04 | 0,04 | -0,02 | 0,02 |

# Internal Gate Potential PXD9-6

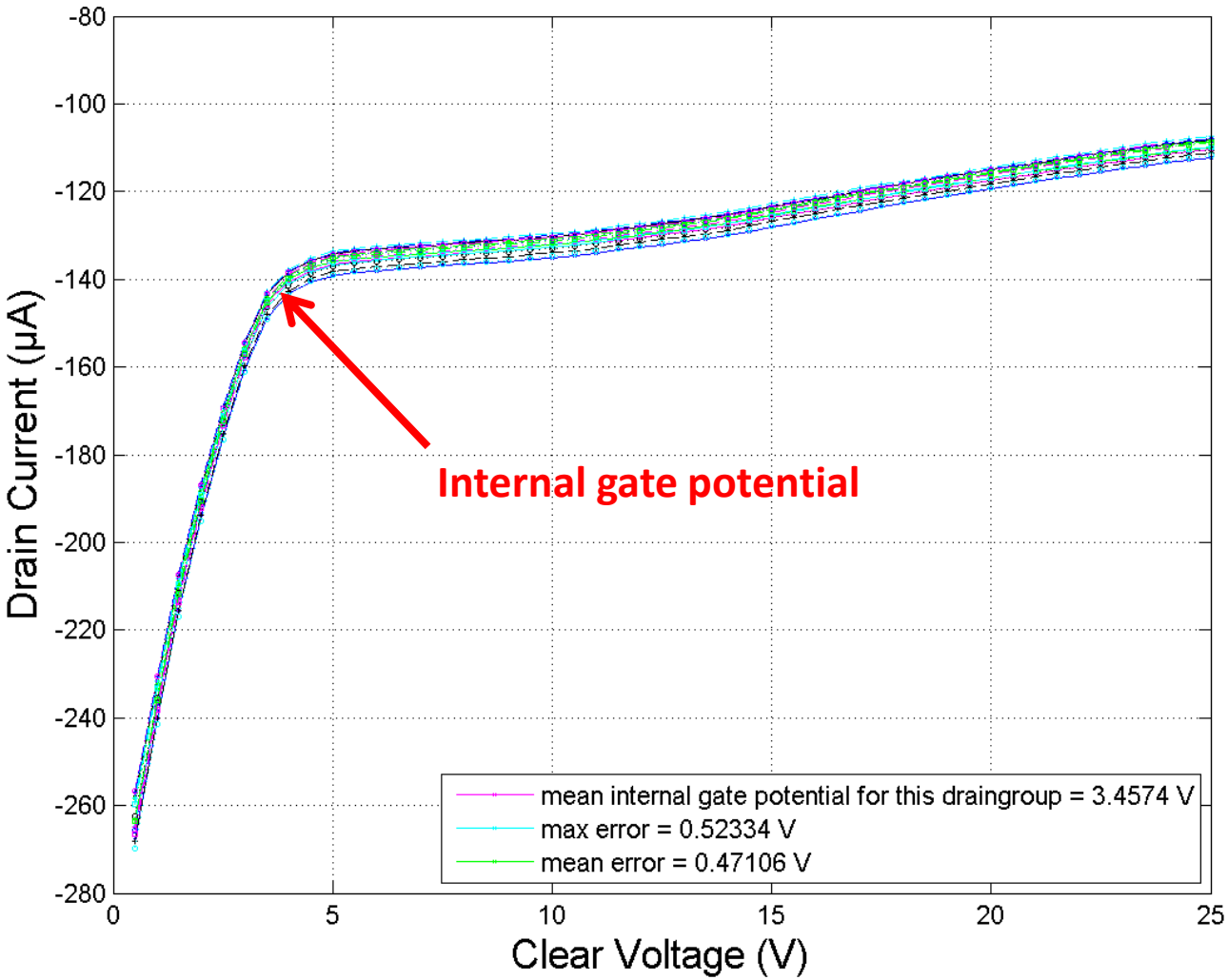


Internal gate potential of one gate row as a function of the clear voltage for 18 drains.

An average over the full gate row (1000 drains) gives:

- Mean internal gate potential: 3.5 ± 0.5 V

# Output Characteristics PXD9-6

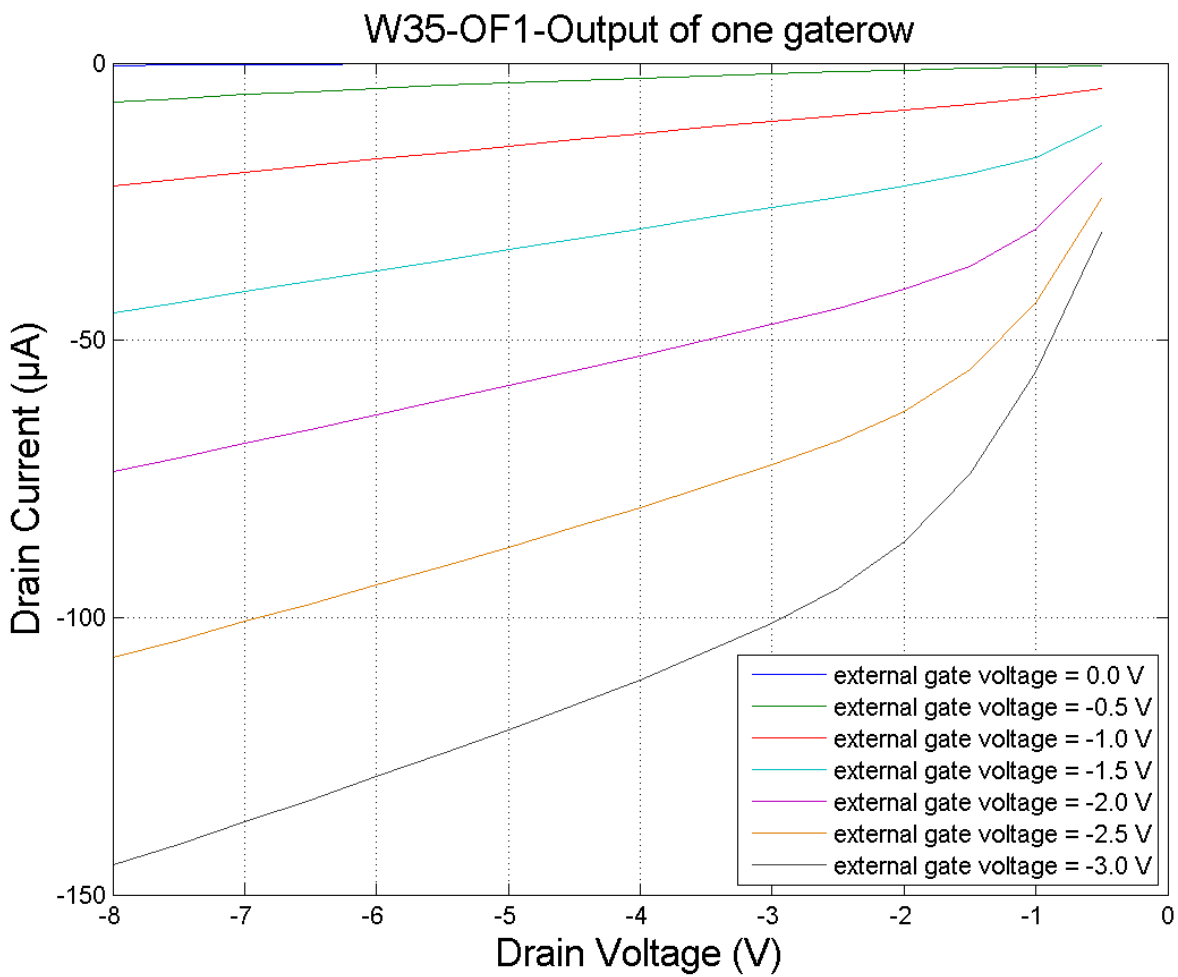


Average output characteristics of one gate row as a function of the drain voltage for different external gate voltages.

- The channel length modulation factor is: $\lambda = 8.8 \pm 0.5$ V at a gate voltage of $V_{GS} = -3$ V

# AllClear (n+) vs Source, Drain and Drift (p+)

ClearGate is coupled with the Clear if: RC > $t_{Clear}$

But in static measurements $t_{Clear}$ >> RC
hence $V_{CG}$ isn't coupled anymore to $V_{Cl}$ and fixed at 0 V over the $R_{ESD}^{CG}$

$$\Delta V_{CG} = \Delta V_{CL} * \frac{C_{CG-Cl}}{\sum C_{CG}}$$

≈ 30%

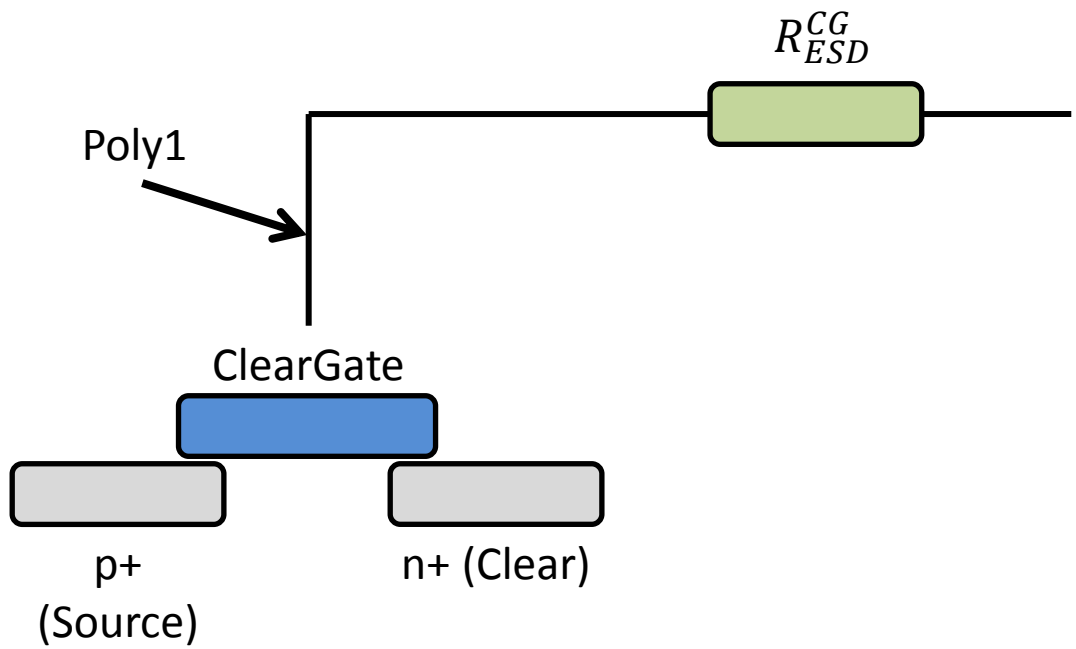

# Structure of DEPFET

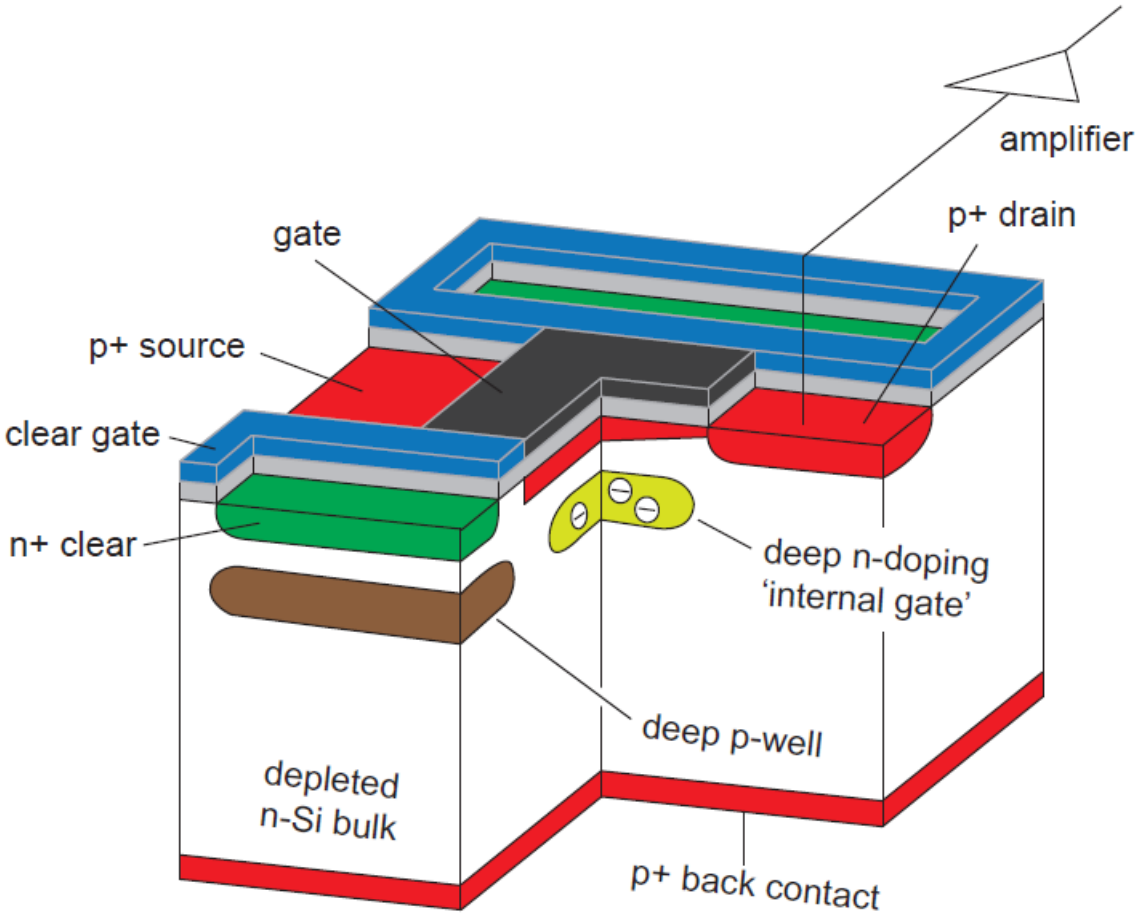


- Basics of DEPFET
  - $e^-$ from the $e^-$-h pairs move to deep n-doping (internal gate)
  - If enough image charges are collected at the gate due to the collected $e^-$ charges in the internal gate, an proportional transistor current can be read out
  - $n^+$clear removes the $e^-$ from the internal gate